2014 MULE™ 600 PARTS DIAGRAM

Rear Fender(s)

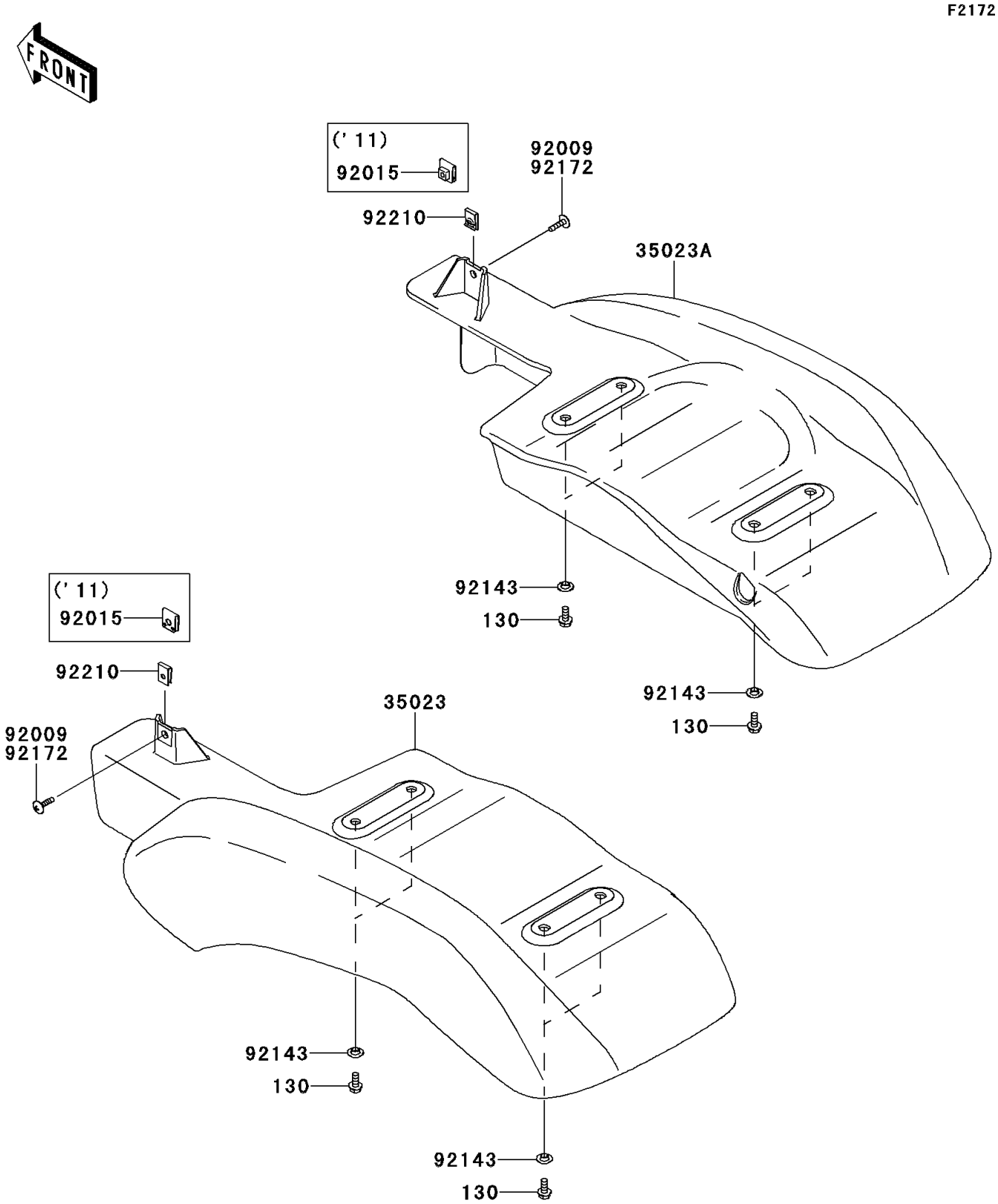

© 2024 Kawasaki Motors Corp., U.S.A.

2014 MULE™ 600 PARTS LIST

Rear Fender(s)

ITEM NAME	PART NUMBER	QUANTITY
BOLT-FLANGED,6X14 (Ref # 130)	130BB0614	8
FENDER-REAR,LH,F.BLACK (Ref # 35023)	35023-0045-6Z	1
FENDER-REAR,RH,F.BLACK (Ref # 35023A)	35023-0046-6Z	1
COLLAR (Ref # 92143)	92143-1087	8
SCREW,TAPPING,6X20 (Ref # 92172)	92172-0488	2
NUT,LEAF SPRING,6MM (Ref # 92210)	92210-0624	2

© 2024 Kawasaki Motors Corp., U.S.A.