2011 VULCAN® 1700 NOMAD™ PARTS DIAGRAM

Water Pump

E3031

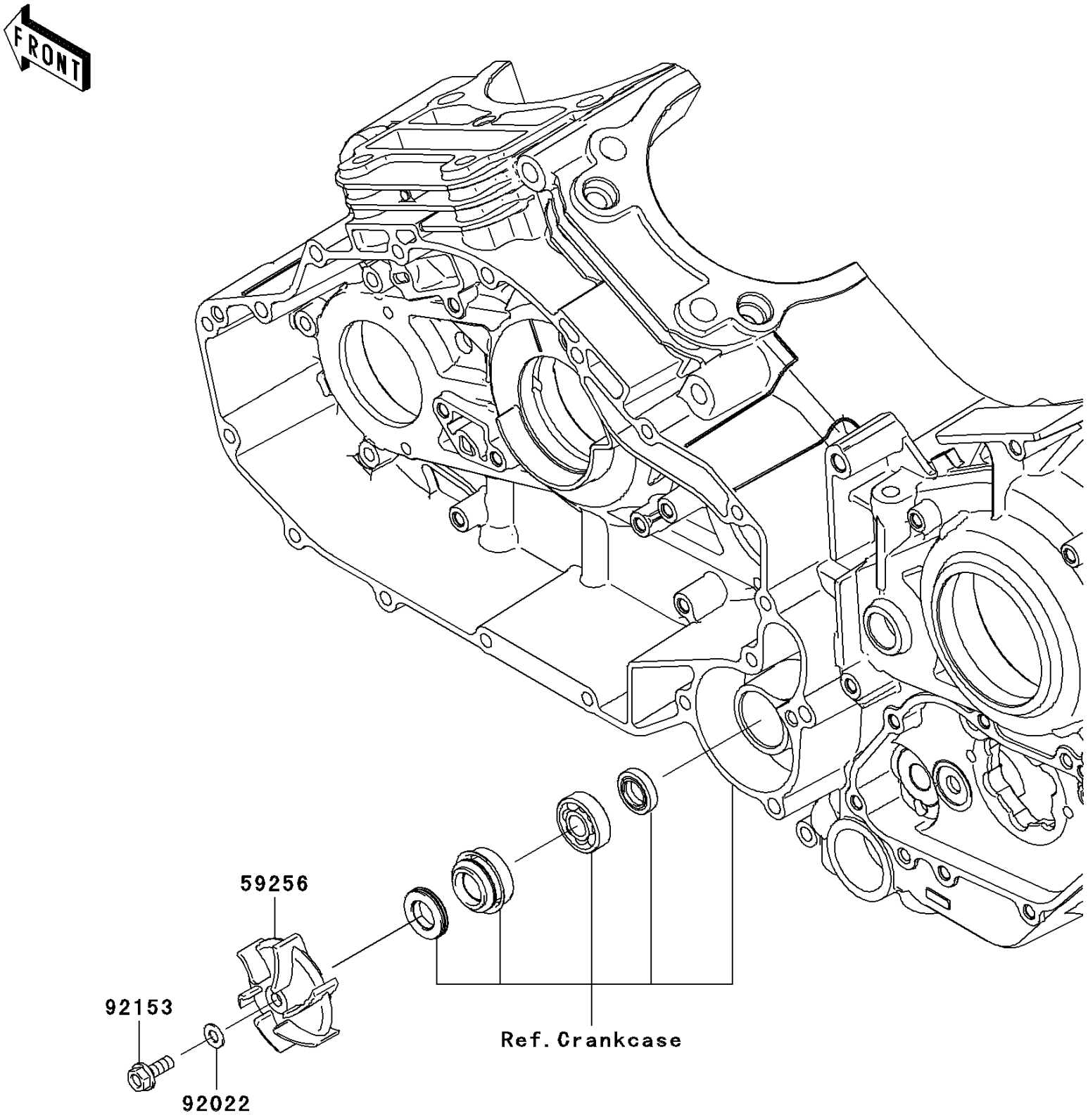

© 2024 Kawasaki Motors Corp., U.S.A.

2011 VULCAN® 1700 NOMAD™ PARTS LIST

Water Pump

ITEM NAME	PART NUMBER	QUANTITY
IMPELLER (Ref # 59256)	59256-0002	1
WASHER,6.1X12X1 (Ref # 92022)	92022-077	1
BOLT,LEFT HANDED,6X16 (Ref # 92153)	92153-0323	1

© 2024 Kawasaki Motors Corp., U.S.A.