2006 Vulcan 900 Classic PARTS DIAGRAM

Rear Wheel/Chain

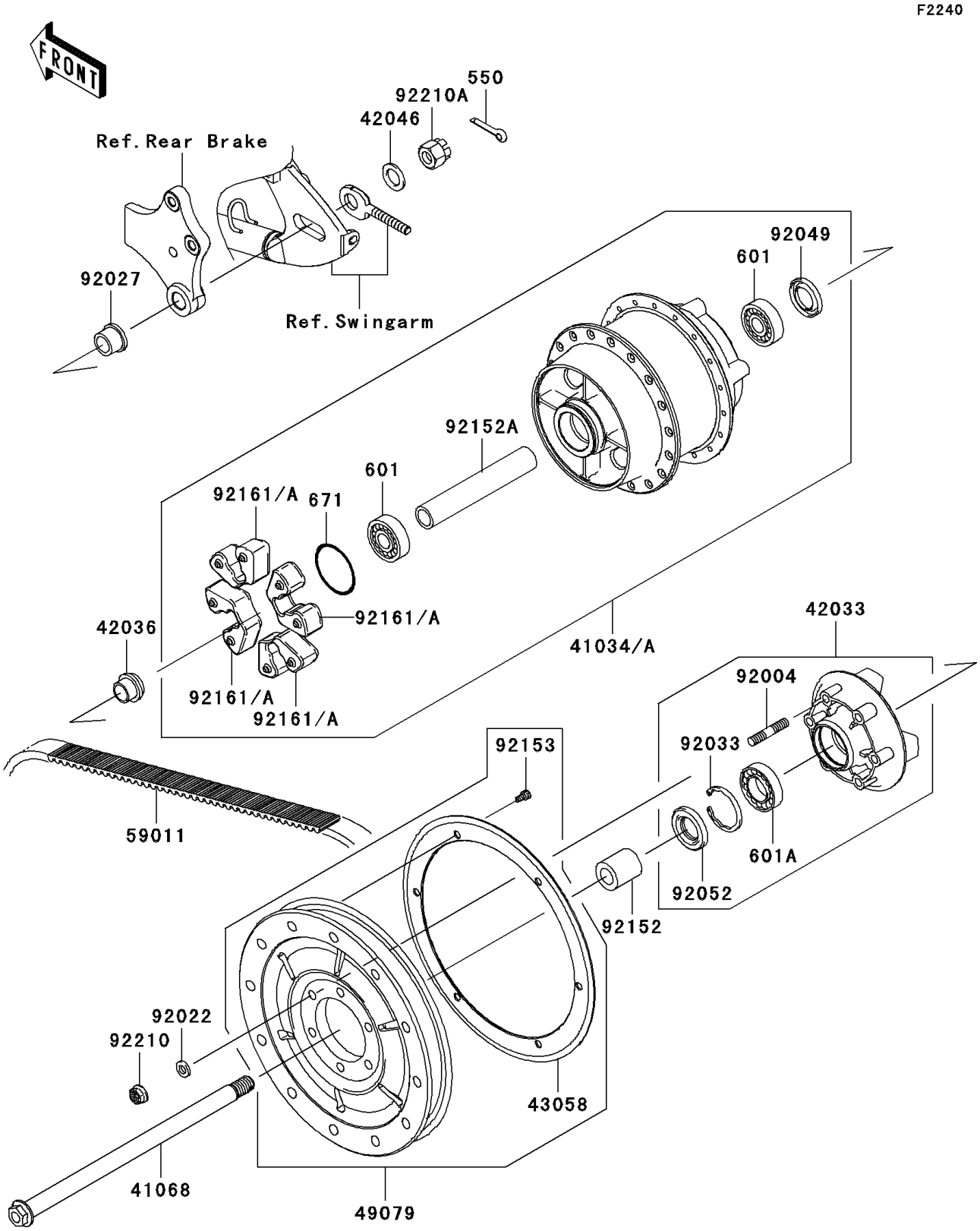

© 2025 Kawasaki Motors Corp., U.S.A.

2006 Vulcan 900 Classic PARTS LIST

Rear Wheel/Chain

ITEM NAME	PART NUMBER	QUANTITY
PIN-COTTER,4.0X35 (Ref # 550)	550AA4035	1
BEARING-BALL,6204UUC3 (Ref # 601)	601B6204UU	2
BEARING-BALL (Ref # 601A)	601B6205UU	1
O RING,60MM (Ref # 671)	671B2560	1
DRUM-ASSY,REAR BRAKE (Ref # 41034)	41034-0039	1
AXLE,RR (Ref # 41068)	41068-0057	1
COUPLING-ASSY,RR HUB (Ref # 42033)	42033-0022	1
SLEEVE,RR HUB,L=23 (Ref # 42036)	42036-1251	1
WASHER,21X33X2.6 (Ref # 42046)	42046-003	1
RING,REAR PULLEY (Ref # 43058)	43058-0011	1
PULLEY-BELT (Ref # 49079)	49079-0011	1
BELT,DRIVE,153T (Ref # 59011)	59011-0013	1
STUD,10X35 (Ref # 92004)	92004-0016	6
WASHER,10.5X19X3.2 (Ref # 92022)	92022-1820	6
COLLAR,RR AXLE,L=21.5 (Ref # 92027)	92027-1902	1
RING-SNAP,52MM (Ref # 92033)	92033-1043	1
SEAL-OIL,BJN28475 (Ref # 92049)	92049-1056	1
SEAL-OIL,TWC35527 (Ref # 92052)	92052-006	1
COLLAR,RR AXLE,LH,L=38.6 (Ref # 92152)	92152-0350	1
COLLAR,REAR BRAKE DRUM,L=166.4 (Ref # 92152A)	92152-0351	1
BOLT,SOCKET,6X12 (Ref # 92153)	92153-1525	6
DAMPER,SHOCK,RR HUB (Ref # 92161)	92161-0342	4
NUT,LOCK,FLANGED,10MM (Ref # 92210)	92210-0276	6
NUT,CASTLE,18MM (Ref # 92210A)	92210-1134	1

© 2025 Kawasaki Motors Corp., U.S.A.