2006 Vulcan 900 Classic PARTS DIAGRAM

Water Pump

E3031

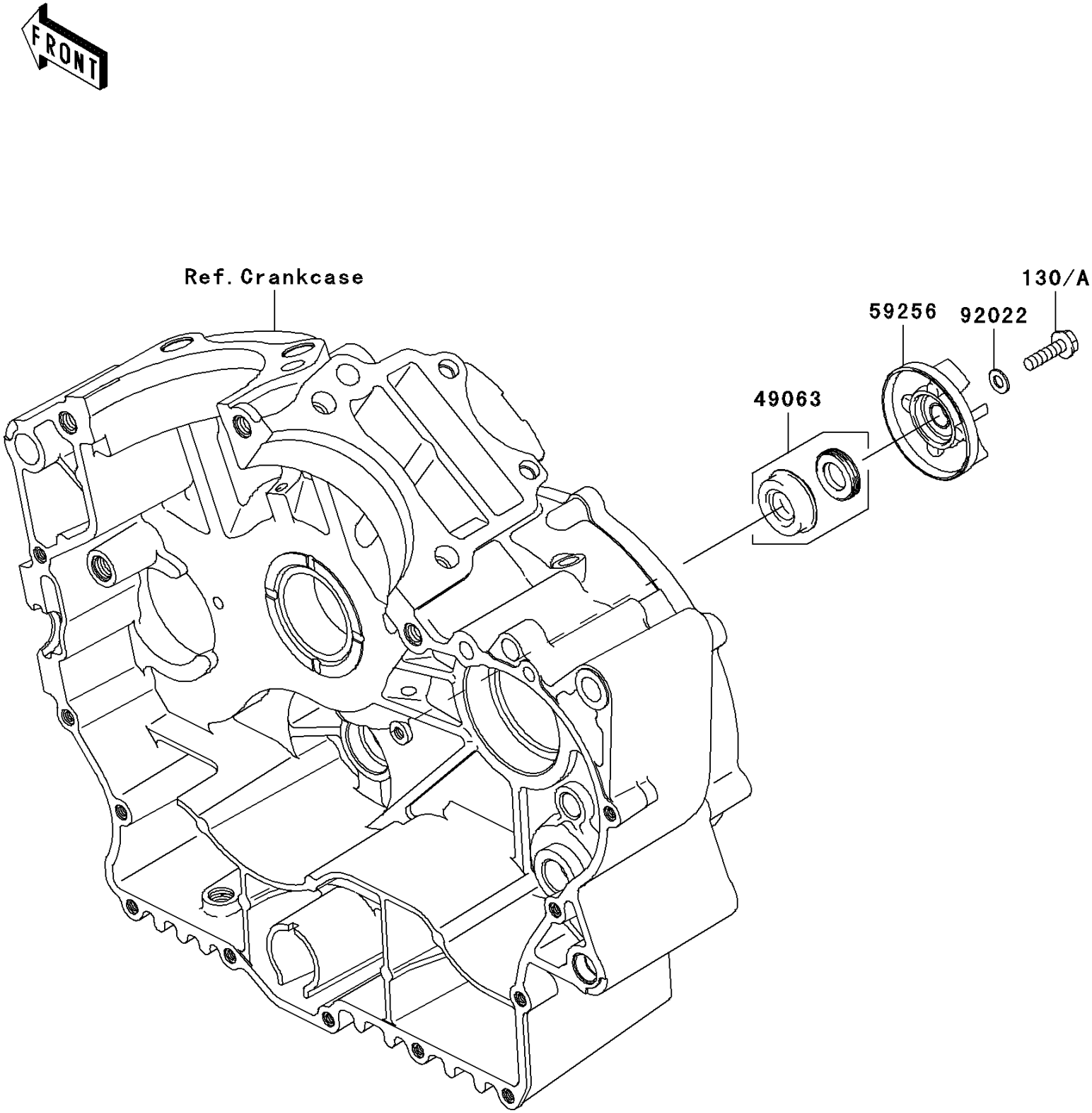

© 2025 Kawasaki Motors Corp., U.S.A.

2006 Vulcan 900 Classic PARTS LIST

Water Pump

ITEM NAME	PART NUMBER	QUANTITY
BOLT-FLANGED,6X22 (Ref # 130A)	130R0622	1
SEAL-MECHANICAL,WATER (Ref # 49063)	49063-1055	1
IMPELLER (Ref # 59256)	59256-1073	1
WASHER,6.1X12X1 (Ref # 92022)	92022-077	1

© 2025 Kawasaki Motors Corp., U.S.A.