2006 KX85 PARTS DIAGRAM

Labels(A6F/A7F)

F2860

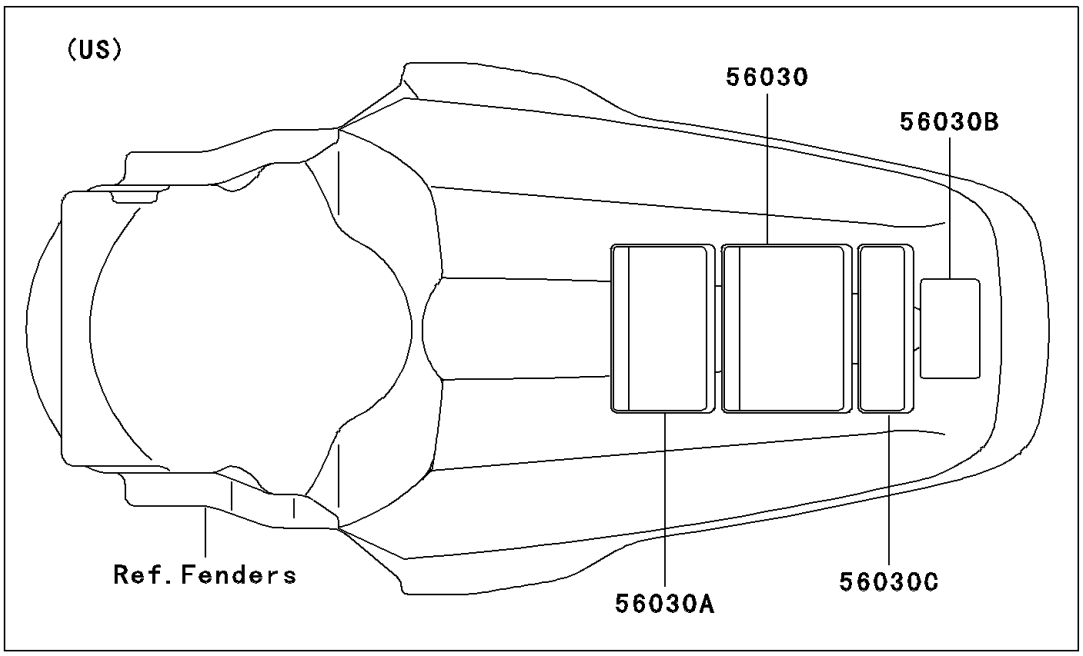

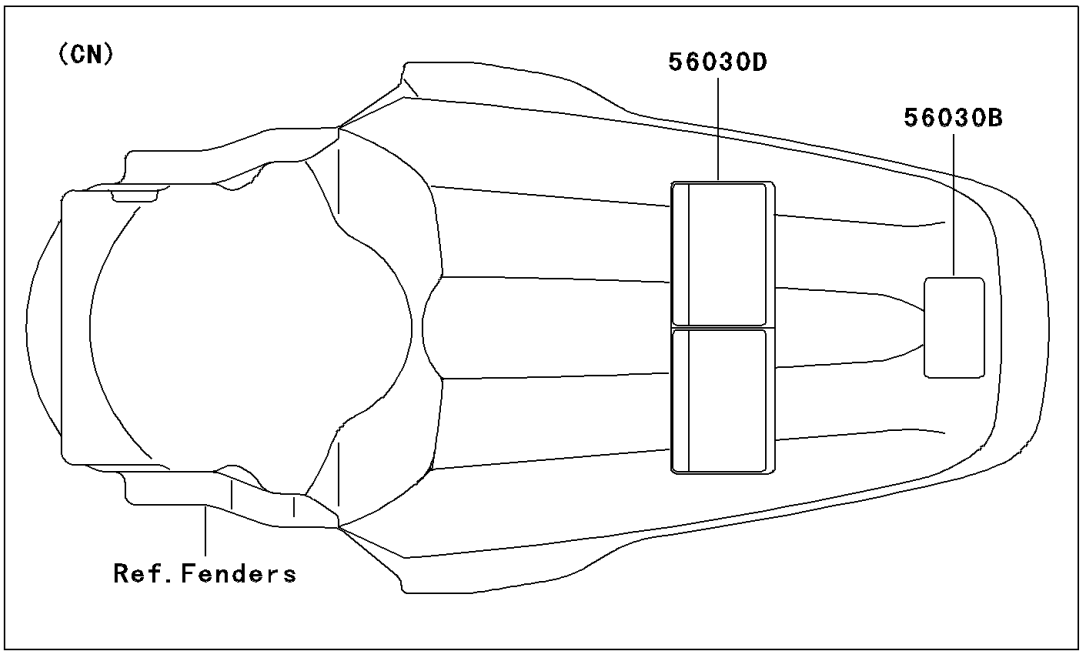

© 2024 Kawasaki Motors Corp., U.S.A.

2006 KX85 PARTS LIST

Labels(A6F/A7F)

ITEM NAME	PART NUMBER	QUANTITY
LABEL,32:1 (Ref # 56030B)	56030-1230	1
LABEL,IMPORTANT NOTICE (Ref # 56030)	56030-1228	1
LABEL,DISCLAIMER (Ref # 56030A)	56030-1229	1
LABEL,NOISE EMISSION (Ref # 56030C)	56030-1231	1
LABEL,DISCLAIMER (Ref # 56030D)	56030-1233	1

© 2024 Kawasaki Motors Corp., U.S.A.