2014 KLR™650 PARTS DIAGRAM

Crankcase

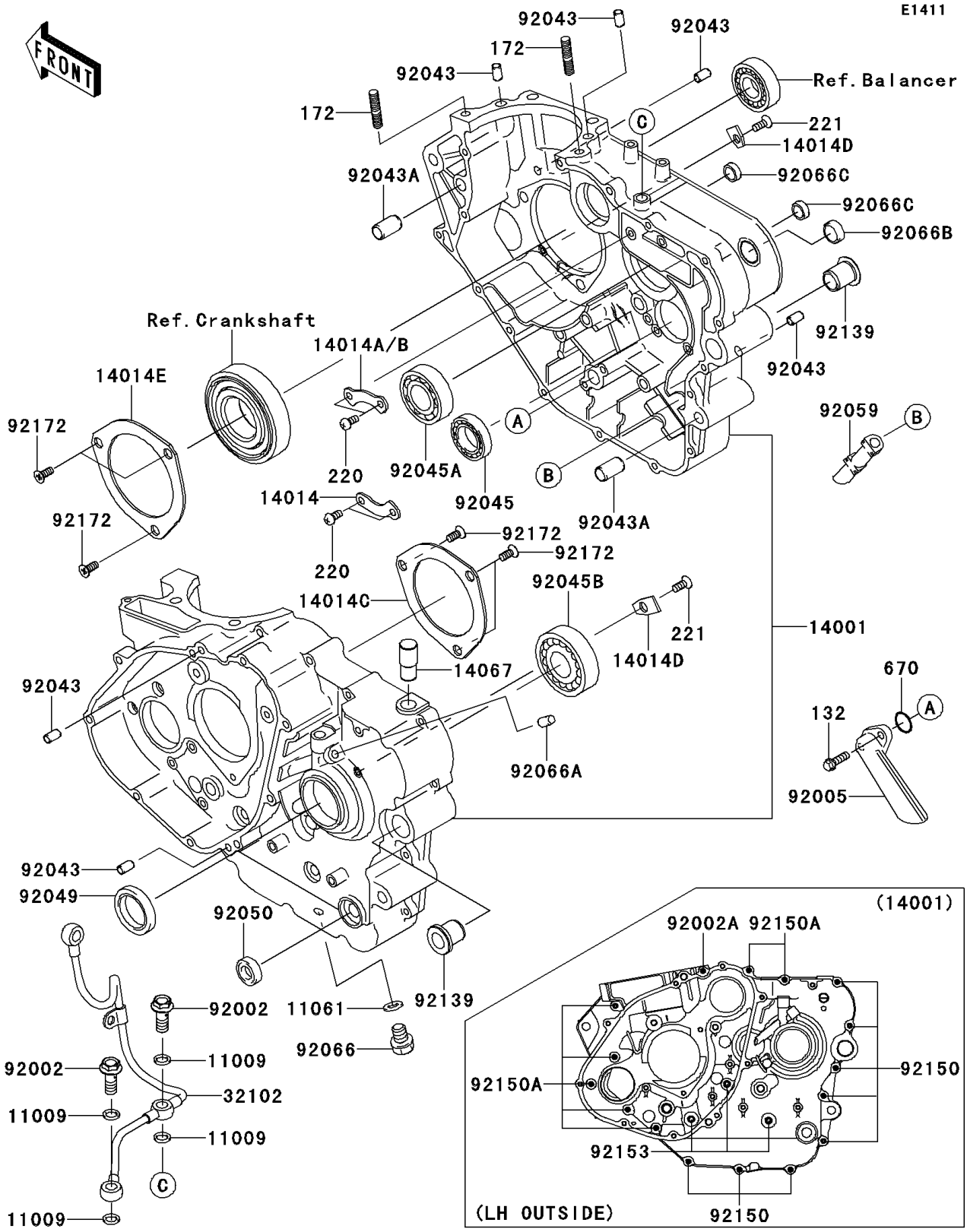

© 2025 Kawasaki Motors Corp., U.S.A.

2014 KLR™650 PARTS LIST

Crankcase

ITEM NAME	PART NUMBER	QUANTITY
BOLT-FLANGED-SMALL,6X20 (Ref # 132)	132BA0620	2
BOLT-STUD,8X22 (Ref # 172)	172BA0822	2
SCREW-PAN-CROS,6X12 (Ref # 220)	220AA0612	4
SCREW-CSK-CROS,6X12 (Ref # 221)	221AA0612	2
O RING (Ref # 670)	670D2018	1
GASKET,10X14.5X1.5 (Ref # 11009)	11009-1105	4
GASKET,12X22X2 (Ref # 11061)	11061-0417	1
SET-CRANKCASE (Ref # 14001)	14001-5421	1
PLATE-POSITION (Ref # 14014)	14014-0045	1
PLATE-POSITION (Ref # 14014B)	14014-0562	1
PLATE-POSITION (Ref # 14014C)	14014-1051	1
PLATE-POSITION (Ref # 14014D)	14014-1057	2
PLATE-POSITION (Ref # 14014E)	14014-1083	1
FITTING,BREATHER (Ref # 14067)	14067-006	1
PIPE,CRANKCASE-HEAD (Ref # 32102)	32102-1353	1
BOLT,BANJO,10X25 (Ref # 92002)	92002-1170	2
BOLT,FLANGED,6X60 (Ref # 92002A)	92002-1567	1
FITTING (Ref # 92005)	92005-1152	1
PIN,6.2X8X14 (Ref # 92043)	92043-1263	6
PIN,11.5X14X14 (Ref # 92043A)	92043-1279	2
BEARING-BALL,#6905 (Ref # 92045)	92045-036	1
BEARING-BALL,TMB205 (Ref # 92045A)	92045-1105	1
BEARING-BALL,TM-SX0597LU (Ref # 92045B)	92045-1127	1
SEAL-OIL,TC32457 (Ref # 92049)	92049-1159	1
SEAL-OIL (Ref # 92050)	92050-082	1
TUBE,BREATHER (Ref # 92059)	92059-1833	1
PLUG,OIL DRAIN,12X15 (Ref # 92066)	92066-0767	1
PLUG,OIL LINE,7.2X8 (Ref # 92066A)	92066-1012	1
PLUG,RCA207 (Ref # 92066B)	92066-1264	1

© 2025 Kawasaki Motors Corp., U.S.A.

2014 KLR™650 PARTS LIST

Crankcase

ITEM NAME	PART NUMBER	QUANTITY
PLUG (Ref # 92066C)	92066-1282	2
BUSHING (Ref # 92139)	92139-0292	2
BOLT,6X30 (Ref # 92150)	92150-1021	8
BOLT,6X50 (Ref # 92150A)	92150-1968	7
BOLT,FLANGED-SMALL,8X80 (Ref # 92153)	92153-1323	3
SCREW,6X15 (Ref # 92172)	92172-0144	6

© 2025 Kawasaki Motors Corp., U.S.A.