2008 KFX®450R PARTS DIAGRAM

Cylinder Head Cover

E1112

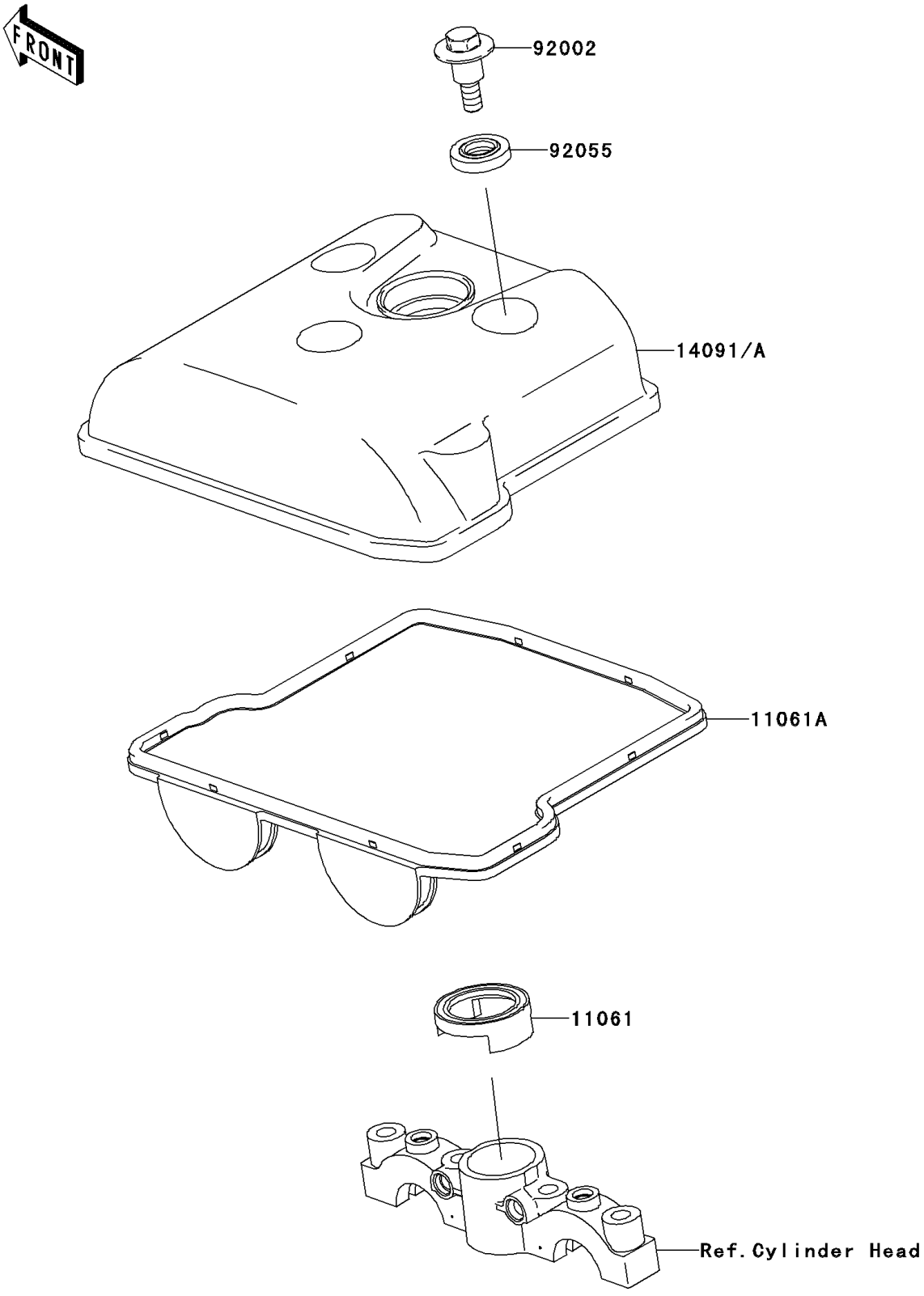

© 2024 Kawasaki Motors Corp., U.S.A.

2008 KFX®450R PARTS LIST

Cylinder Head Cover

ITEM NAME	PART NUMBER	QUANTITY
GASKET,PLUG HOLE (Ref # 11061)	11061-0079	1
GASKET,CYLINDER HEAD COVER (Ref # 11061A)	11061-0185	1
COVER,CYLINDER HEAD (Ref # 14091A)	14091-0807	1
BOLT,FLANGED,6X22.5 (Ref # 92002)	92002-1327	3
RING-O,HEAD COVER BOLT (Ref # 92055)	92055-1352	3

© 2024 Kawasaki Motors Corp., U.S.A.