# 2023 KLX®230SM ABS

## PARTS DIAGRAM

### Crankcase

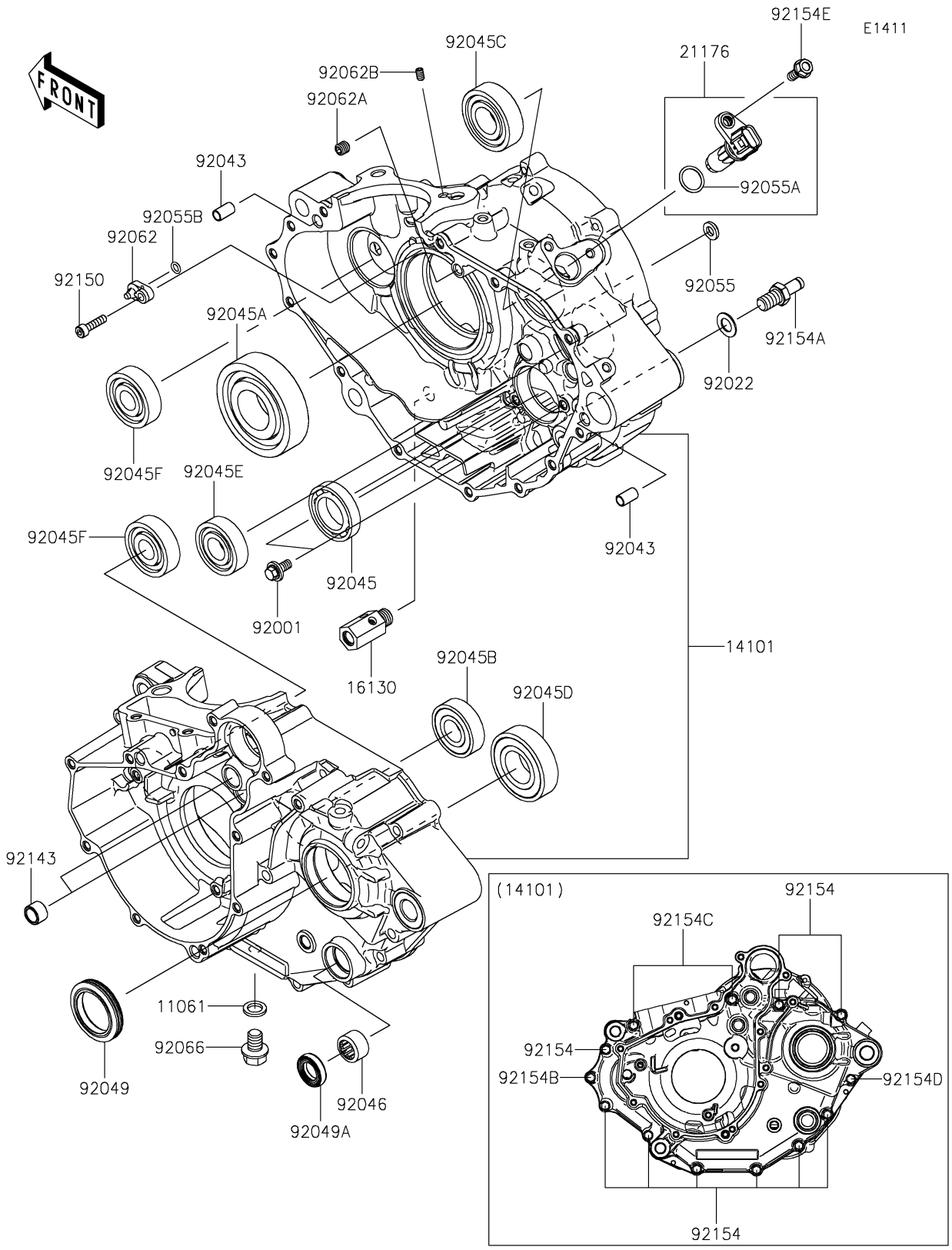


© 2026 Kawasaki Motors Corp., U.S.A.

# 2023 KLX®230SM ABS

## PARTS LIST

### Crankcase

| ITEM NAME | PART NUMBER | QUANTITY |
|---|---|---|
| GASKET,10.5X16X2 (Ref # 11061) | 11061-0222 | 1 |
| SET-CRANKCASE (Ref # 14101) | 14101-0004 | 1 |
| VALVE-ASSY-RELIEF (Ref # 16130) | 16130-0002 | 1 |
| SENSOR,SPEED (Ref # 21176) | 21176-0894 | 1 |
| BOLT,W/WASHER,6X14 (Ref # 92001) | 92001-1829 | 2 |
| WASHER,10.2X18X1.0,SK5 (Ref # 92022) | 92022-1415 | 1 |
| PIN,6.2X8X14 (Ref # 92043) | 92043-1741 | 2 |
| BEARING-BALL,25X42X9 (Ref # 92045) | 92045-0881 | 1 |
| BEARING-BALL,6306CM (Ref # 92045A) | 92045-0907 | 1 |
| BEARING-BALL,6203NSE9C3 (Ref # 92045B) | 92045-0908 | 1 |
| BEARING-BALL,6204C3 (Ref # 92045C) | 92045-0909 | 1 |
| BEARING-BALL,6205NSE9C3 (Ref # 92045D) | 92045-0910 | 1 |
| BEARING-BALL,6203C3 (Ref # 92045E) | 92045-0911 | 1 |
| BEARING-BALL,6302CS13 (Ref # 92045F) | 92045-0912 | 2 |
| BEARING-NEEDLE,HK1412FM (Ref # 92046) | 92046-0043 | 1 |
| SEAL-OIL,32X45X7.5 (Ref # 92049) | 92049-0825 | 1 |
| SEAL-OIL,TC14245 (Ref # 92049A) | 92049-1520 | 1 |
| RING-O,OD=13 (Ref # 92055) | 92055-074 | 1 |
| RING-O (Ref # 92055A) | 92055-0958 | 1 |
| RING-O,5.5X1.5 (Ref # 92055B) | 92055-1339 | 1 |
| NOZZLE (Ref # 92062) | 92062-0050 | 1 |
| NOZZLE,8X8 (Ref # 92062A) | 92062-0567 | 1 |
| NOZZLE,6X8,SILVER (Ref # 92062B) | 92062-1081 | 1 |
| PLUG,DRAIN (Ref # 92066) | 92066-0978 | 1 |
| COLLAR (Ref # 92143) | 92143-1263 | 2 |
| BOLT,SOCKET,5X20 (Ref # 92150) | 92150-1019 | 1 |
| BOLT,6X50 (Ref # 92154) | 92154-1168 | 9 |
| BOLT,RETURN SPRING (Ref # 92154A) | 92154-1306 | 1 |
| BOLT,FLANGED,6X30 (Ref # 92154B) | 92154-2758 | 1 |

© 2026 Kawasaki Motors Corp., U.S.A.

# 2023 KLX®230SM ABS

## PARTS LIST

### Crankcase

| ITEM NAME | PART NUMBER | QUANTITY |
|---|---|---|
| BOLT,FLANGED,6X70 (Ref # 92154C) | 92154-2764 | 2 |
| BOLT,FLANGED,6X65 (Ref # 92154D) | 92154-2766 | 1 |
| BOLT,FLANGED,6X16 (Ref # 92154E) | 92154-2895 | 1 |

© 2026 Kawasaki Motors Corp., U.S.A.