2025 Ridge HVAC

PARTS DIAGRAM

Rear Suspension

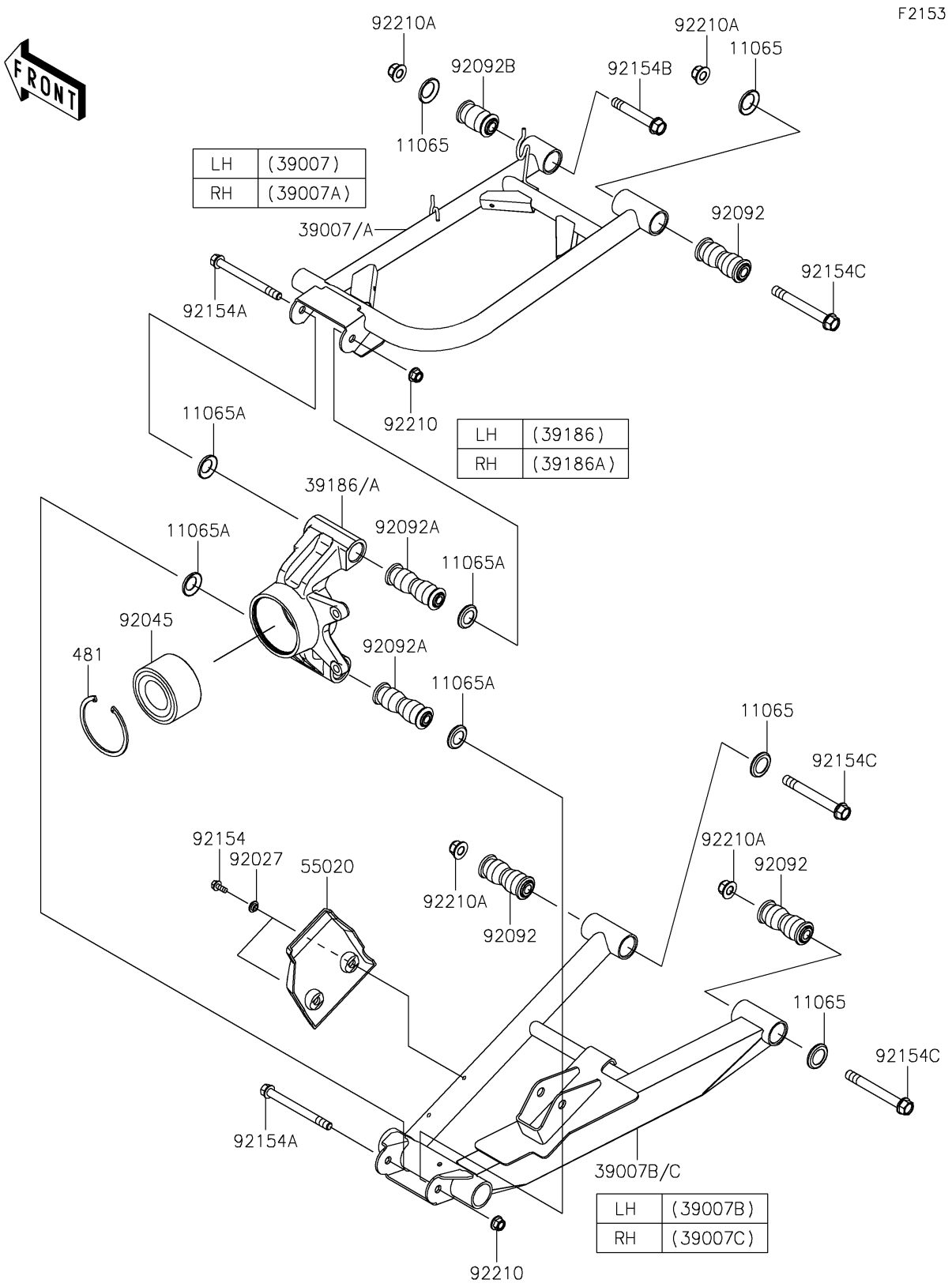

© 2026 Kawasaki Motors Corp., U.S.A.

2025 Ridge HVAC

PARTS LIST

Rear Suspension

ITEM NAME	PART NUMBER	QUANTITY
CAP,ARM (Ref # 11065)	11065-0838	8
CAP (Ref # 11065A)	11065-0849	8
ARM-SUSP,RR,UPP,LH,BLACK (Ref # 39007)	39007-0491-10	1
ARM-SUSP,RR,UPP,RH,BLACK (Ref # 39007A)	39007-0492-10	1
ARM-SUSP,RR,LWR,LH,BLACK (Ref # 39007B)	39007-0493-10	1
ARM-SUSP,RR,LWR,RH,BLACK (Ref # 39007C)	39007-0494-10	1
KNUCKLE,RR,LH (Ref # 39186)	39186-0337	1
KNUCKLE,RR,RH (Ref # 39186A)	39186-0338	1
GUARD,RR CVJ (Ref # 55020)	55020-0931	2
COLLAR,L=4.6 (Ref # 92027)	92027-1168	4
BEARING-BALL,42X80X45 (Ref # 92045)	92045-0960	2
BUSHING-RUBBER,12X20X78 (Ref # 92092)	92092-0028	6
BUSHING-RUBBER,10.1X17X88 (Ref # 92092A)	92092-0029	4
BUSHING-RUBBER (Ref # 92092B)	92092-0555	2
BOLT,6X15.6 (Ref # 92154)	92154-1250	4
BOLT,FLANGED,10X110 (Ref # 92154A)	92154-1353	4
BOLT,FLANGED,12X76.5 (Ref # 92154B)	92154-7079	2
BOLT,FLANGED,12X100 (Ref # 92154C)	92154-7081	6
NUT,LOCK,FLANGED,10MM (Ref # 92210)	92210-1081	4
NUT,LOCK,FLANGED,12MM (Ref # 92210A)	92210-1931	8
CIRCLIP-TYPE-C,80MM (Ref # 481)	481J8000	2

© 2026 Kawasaki Motors Corp., U.S.A.