2025 Ridge HVAC

PARTS DIAGRAM

Crankcase Bolt Pattern

E1412

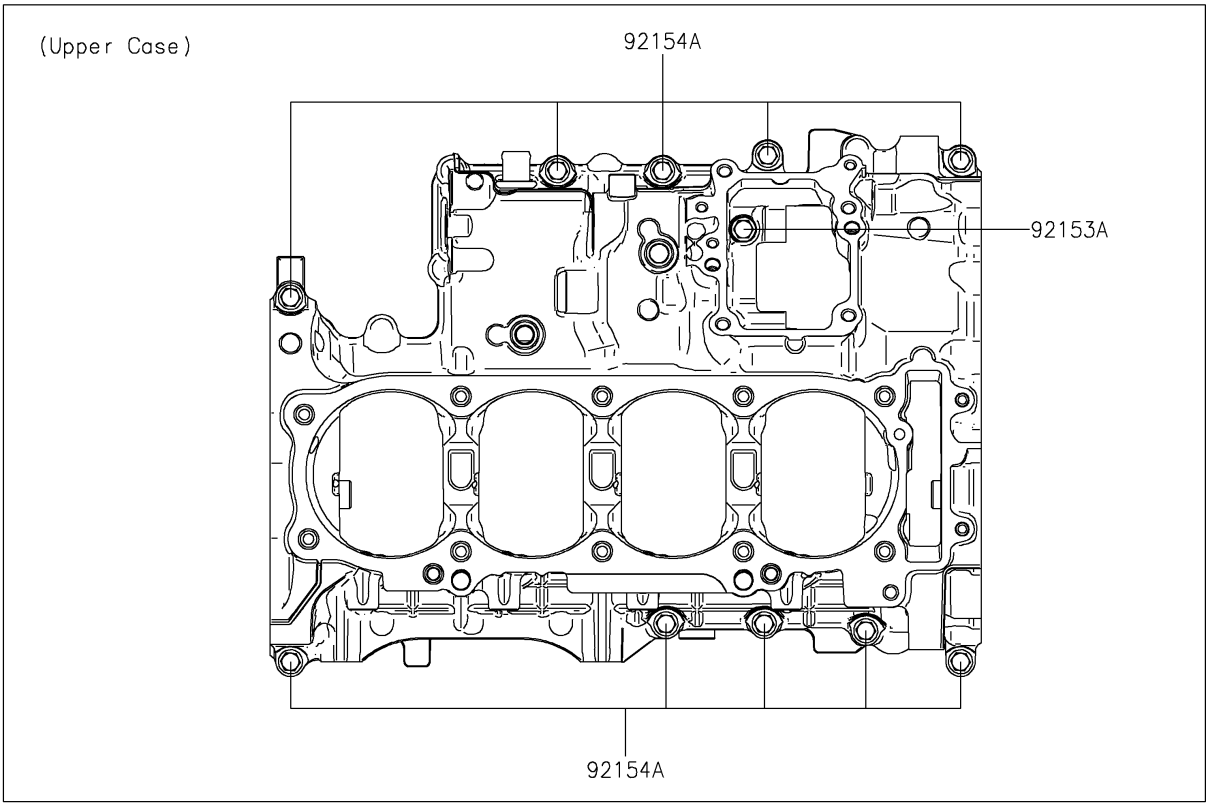

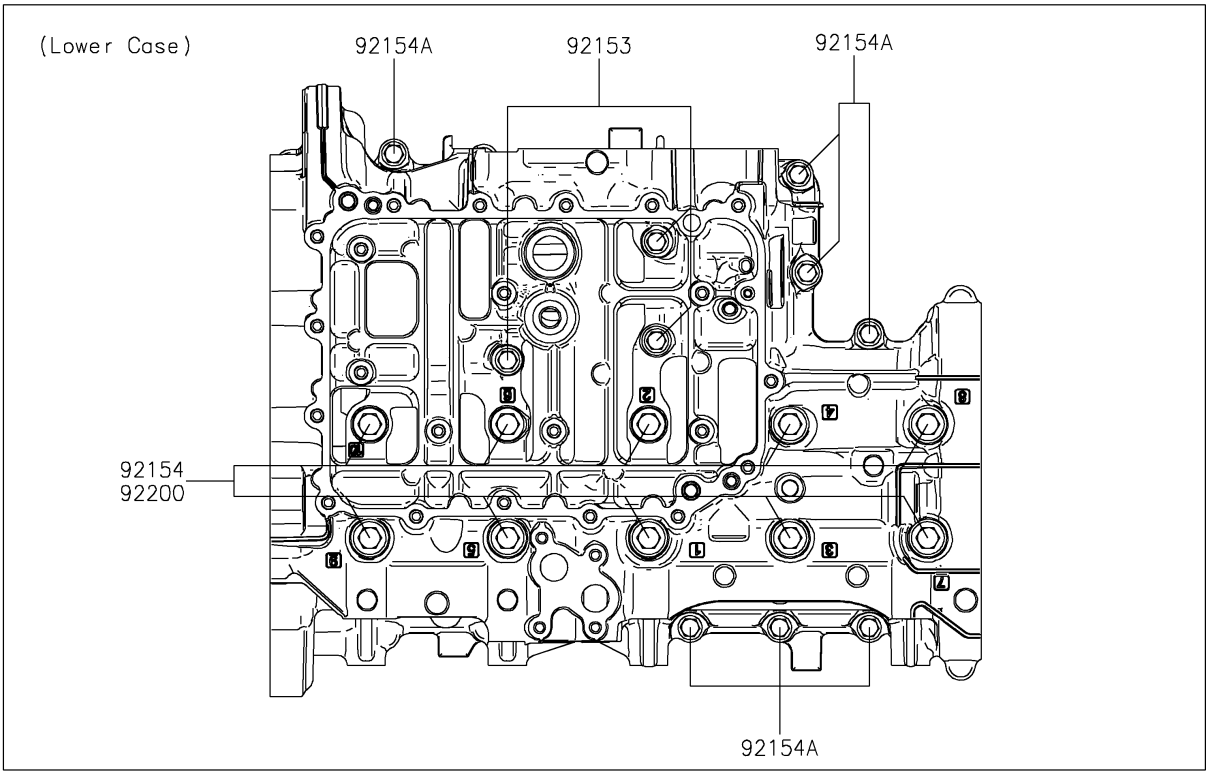

© 2026 Kawasaki Motors Corp., U.S.A.

2025 Ridge HVAC

PARTS LIST

Crankcase Bolt Pattern

ITEM NAME	PART NUMBER	QUANTITY
BOLT,FLANGED,7X85 (Ref # 92153)	92153-1043	3
BOLT,FLANGED,7X60 (Ref # 92153A)	92153-1045	1
BOLT,FLANGED,10X100 (Ref # 92154)	92154-1446	10
BOLT,7X35 (Ref # 92154A)	92154-4472	17
WASHER,10.2X18.4X1.8 (Ref # 92200)	92200-0990	10

© 2026 Kawasaki Motors Corp., U.S.A.