2022 MULE PRO-MX™

PARTS DIAGRAM

Throttle

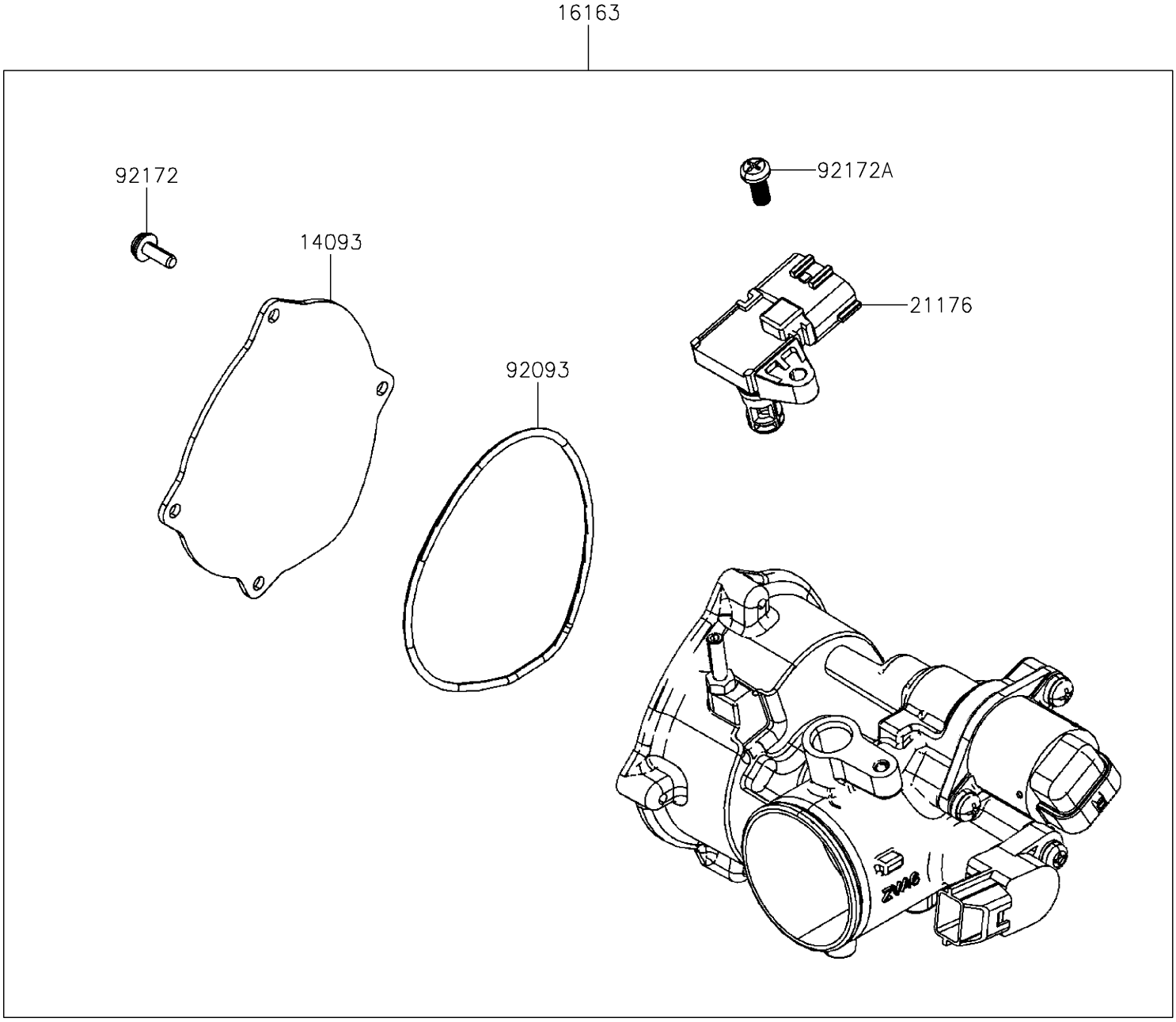

© 2026 Kawasaki Motors Corp., U.S.A.

2022 MULE PRO-MX™

PARTS LIST

Throttle

ITEM NAME	PART NUMBER	QUANTITY
COVER,WIRE STAY (Ref # 14093)	14093-Y047	1
THROTTLE-ASSY (Ref # 16163)	16163-Y006	1
SENSOR,PRESSURE (Ref # 21176)	21176-Y012	1
SEAL,WIRE STAY COVER (Ref # 92093)	92093-Y047	1
SCREW,TAPPING,4X12 (Ref # 92172)	92172-Y085	4
SCREW,PAN,4X12 (Ref # 92172A)	92172-Y086	1

© 2026 Kawasaki Motors Corp., U.S.A.