2004 Vulcan 1600 Classic PARTS DIAGRAM

Cables

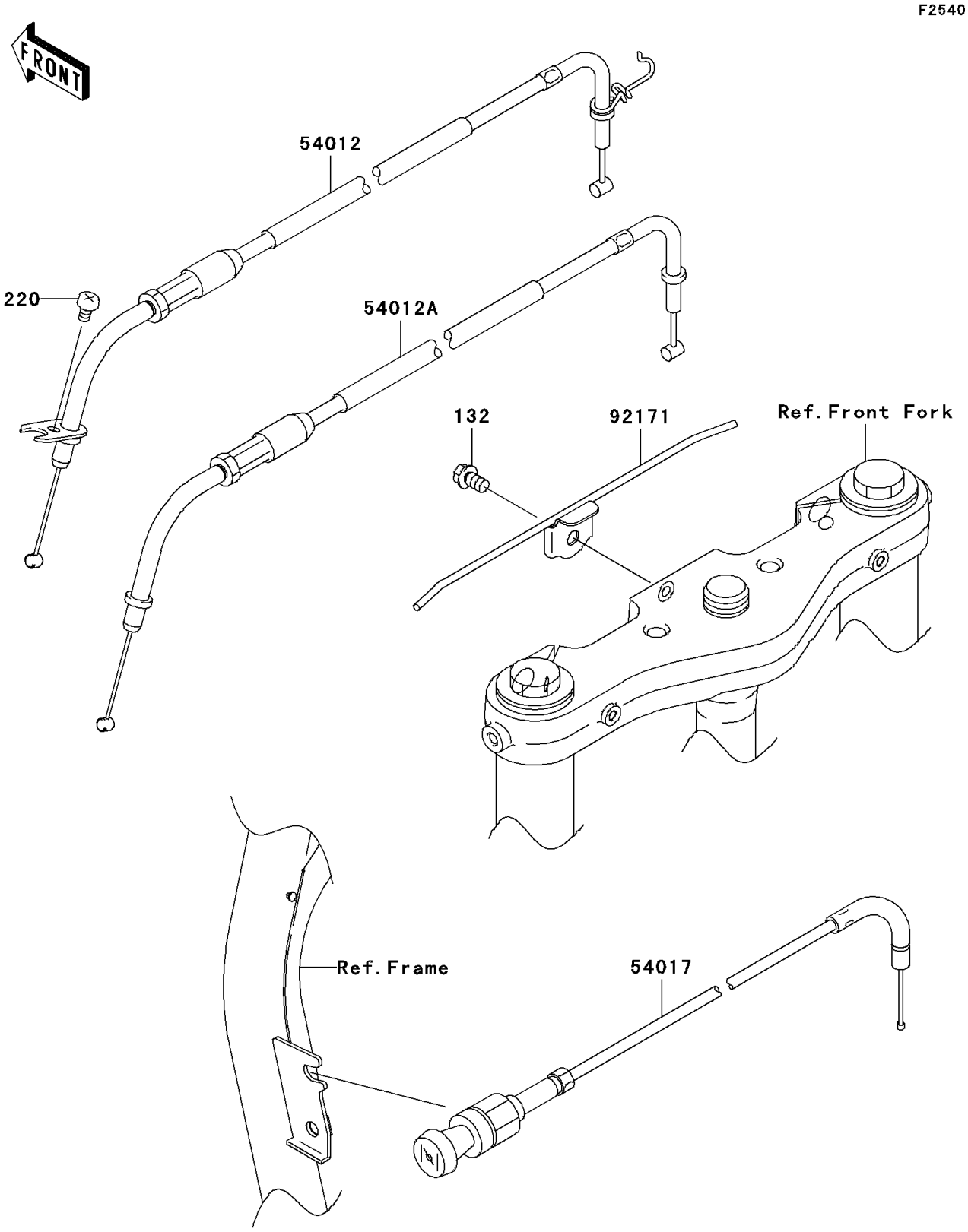

© 2024 Kawasaki Motors Corp., U.S.A.

2004 Vulcan 1600 Classic PARTS LIST

Cables

ITEM NAME	PART NUMBER	QUANTITY
BOLT-FLANGED-SMALL,M6X10 (Ref # 132)	132L0610	1
SCREW-PAN-CROSS (Ref # 220)	220F0514	1
CABLE-THROTTLE,OPENING (Ref # 54012)	54012-0069	1
CABLE-THROTTLE,CLOSING (Ref # 54012A)	54012-0070	1
CABLE-STARTER (Ref # 54017)	54017-1202	1
CLAMP,CABLE&HOSE (Ref # 92171)	92171-0057	1

© 2024 Kawasaki Motors Corp., U.S.A.