2021 Z900RS

PARTS DIAGRAM

Owner's Tools

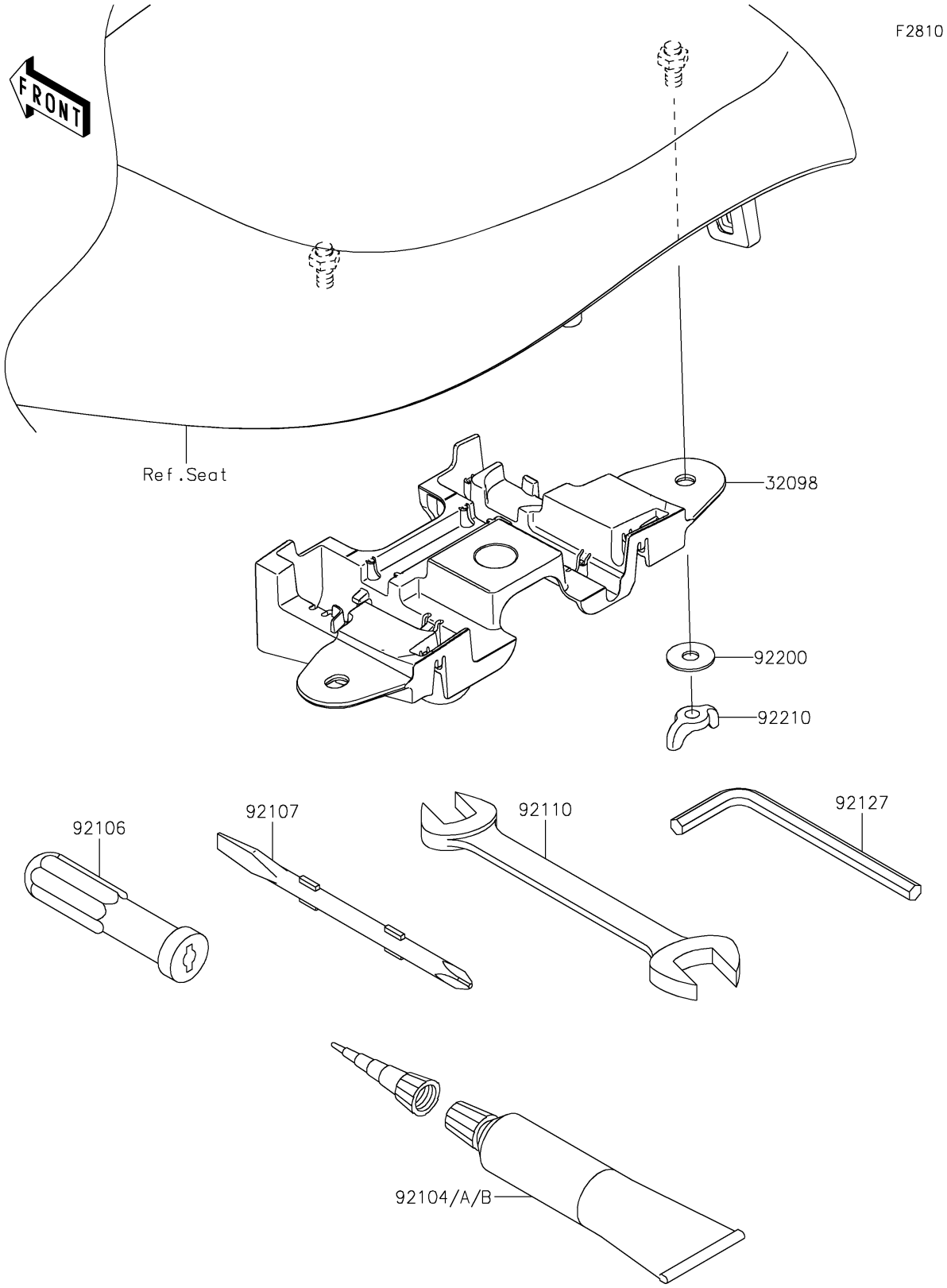

© 2026 Kawasaki Motors Corp., U.S.A.

2021 Z900RS

PARTS LIST

Owner's Tools

ITEM NAME	PART NUMBER	QUANTITY
CASE-TOOL (Ref # 32098)	32098-0025	1
GASKET-LIQUID,TB1211F,CLEAR (Ref # 92104)	92104-0004	1
GASKET-LIQUID,TB1216B,BLACK (Ref # 92104A)	92104-1064	1
GASKET-LIQUID,TB1207B,BLACK (Ref # 92104B)	92104-2068	1
GRIP-SCREW DRIVER (Ref # 92106)	92106-1001	1
TOOL-DRIVER,#2PHILLIPS&SLOT (Ref # 92107)	92107-1051	1
TOOL-WRENCH,OPEN END,14X17 (Ref # 92110)	92110-1045	1
TOOL-WRENCH,ALLEN,6MM (Ref # 92127)	92127-003	1
WASHER (Ref # 92200)	92200-0078	2
NUT,WING,6MM (Ref # 92210)	92210-1603	2

© 2026 Kawasaki Motors Corp., U.S.A.