2025 Vulcan 1700 Vaquero ABS PARTS DIAGRAM

Starter Motor

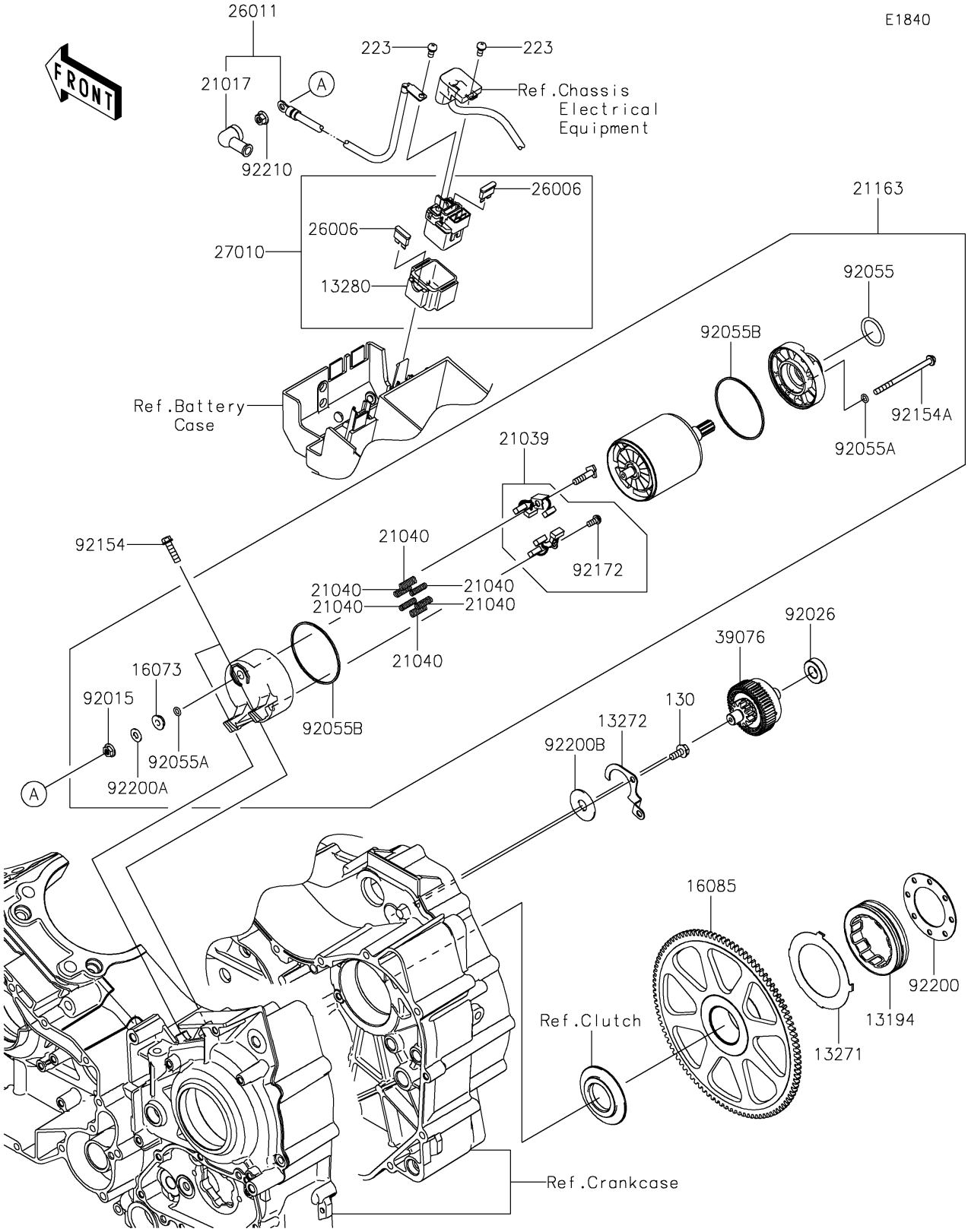

© 2025 Kawasaki Motors Corp., U.S.A.

2025 Vulcan 1700 Vaquero ABS PARTS LIST

Starter Motor

ITEM NAME	PART NUMBER	QUANTITY
CLUTCH-ONEWAY (Ref # 13194)	13194-0001	1
PLATE (Ref # 13271)	13271-0037	1
PLATE,LIMITER (Ref # 13272)	13272-0673	1
HOLDER,MAGNETIC SWITCH (Ref # 13280)	13280-0822	1
INSULATOR (Ref # 16073)	16073-0053	1
GEAR,FREE WHEEL (Ref # 16085)	16085-0121	1
GROMMET,STARTER TERMINAL (Ref # 21017)	21017-017	1
BRUSH (Ref # 21039)	21039-0009	1
SPRING-BRUSH (Ref # 21040)	21040-0003	6
STARTER-ELECTRIC (Ref # 21163)	21163-0055	1
FUSE,BLADE,30A,GREEN (Ref # 26006)	26006-1006	2
WIRE-LEAD (Ref # 26011)	26011-0239	1
SWITCH,MAGNETIC (Ref # 27010)	27010-0793	1
LIMITER,STARTER IDLE GEAR (Ref # 39076)	39076-0017	1
NUT,STARTER MOTOR (Ref # 92015)	92015-1476	1
SPACER,12.3X25X8.1 (Ref # 92026)	92026-0127	1
RING-O (Ref # 92055)	92055-1276	1
RING-O,4.5X2.0 (Ref # 92055A)	92055-1370	3
RING-O,STARTER MOTOR (Ref # 92055B)	92055-1381	2
BOLT,FLANGED-SMALL,6X22 (Ref # 92154)	92154-0198	2
BOLT (Ref # 92154A)	92154-0265	2
SCREW (Ref # 92172)	92172-0334	1
WASHER,44X73.5X1.2 (Ref # 92200)	92200-0019	1
WASHER (Ref # 92200A)	92200-0386	1
WASHER,12X34X1.6 (Ref # 92200B)	92200-0478	1
NUT,6MM (Ref # 92210)	92210-0188	1
BOLT-FLANGED,6X14 (Ref # 130)	130BA0614	1
SCREW-PAN-WS-CROS,5X10 (Ref # 223)	223AA0510	2

© 2025 Kawasaki Motors Corp., U.S.A.