2022 Z400

PARTS DIAGRAM

Front Brake

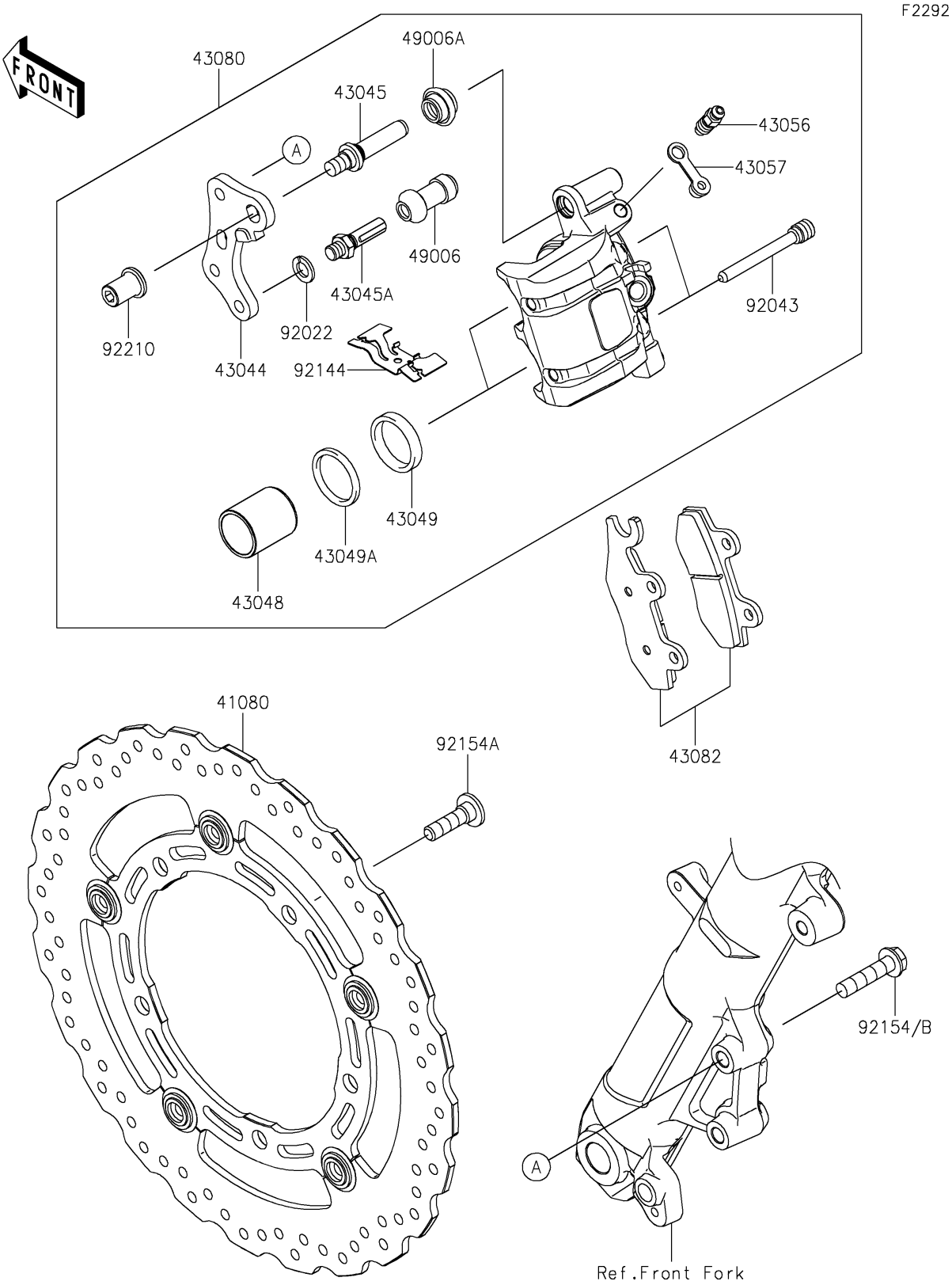

© 2026 Kawasaki Motors Corp., U.S.A.

2022 Z400

PARTS LIST

Front Brake

ITEM NAME	PART NUMBER	QUANTITY
DISC,FR,BLACK+BLK (Ref # 41080)	41080-0727-32L	1
HOLDER-COMP-CALIPER (Ref # 43044)	43044-1112	1
SHAFT-CALIPER (Ref # 43045)	43045-0013	1
SHAFT-CALIPER (Ref # 43045A)	43045-1010	1
PISTON-CALIPER (Ref # 43048)	43048-1068	2
PACKING,PISTON SEAL (Ref # 43049)	43049-1060	2
PACKING,PISTON SEAL (Ref # 43049A)	43049-1061	2
BREATHER-BRAKE (Ref # 43056)	43056-0004	1
CAP-BREATHER (Ref # 43057)	43057-1001	1
CALIPER-SUB-ASSY,FR,BLACK (Ref # 43080)	43080-0244-DJ	1
PAD-ASSY-BRAKE (Ref # 43082)	43082-0175	1
BOOT,CALIPER (Ref # 49006)	49006-1088	1
BOOT,CALIPER (Ref # 49006A)	49006-1242	1
WASHER,WAVE (Ref # 92022)	92022-1373	1
PIN,HANGER (Ref # 92043)	92043-1507	2
SPRING,PAD (Ref # 92144)	92144-1847	1
BOLT,FLANGED,8X35 (Ref # 92154)	92154-1646	2
BOLT,SOCKET,8X30 (Ref # 92154A)	92154-1865	5
NUT (Ref # 92210)	92210-0615	1

© 2026 Kawasaki Motors Corp., U.S.A.