2023 Ninja ZX-6R KRT Edition

PARTS DIAGRAM

Owner's Tools

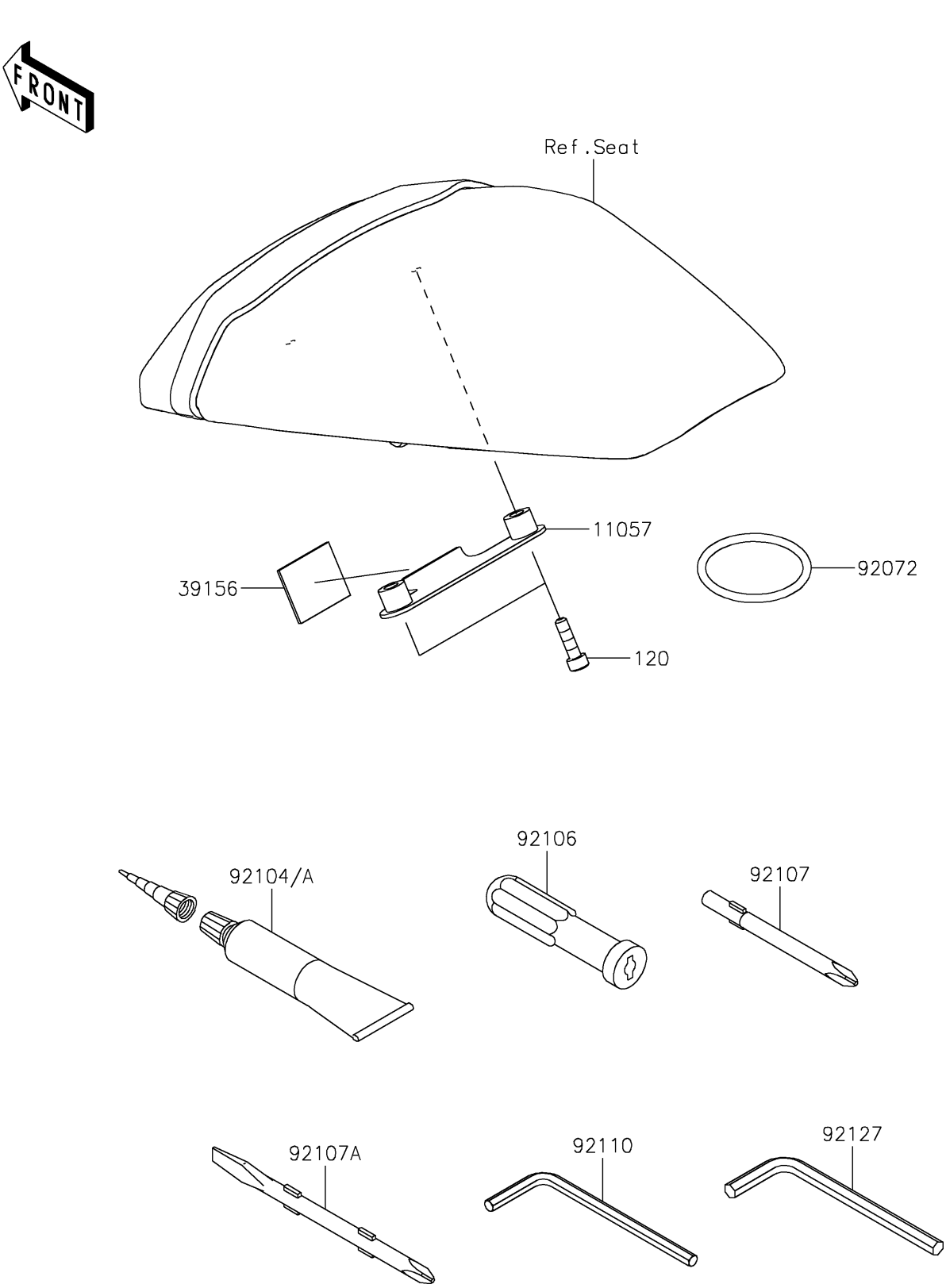

© 2026 Kawasaki Motors Corp., U.S.A.

2023 Ninja ZX-6R KRT Edition

PARTS LIST

Owner's Tools

ITEM NAME	PART NUMBER	QUANTITY
BRACKET (Ref # 11057)	11057-1770	1
PAD,30X30X1 (Ref # 39156)	39156-2289	1
BAND (Ref # 92072)	92072-0820	1
GASKET-LIQUID,TB1211F,CLEAR (Ref # 92104)	92104-0004	1
GASKET-LIQUID,TB1216B,BLACK (Ref # 92104A)	92104-1064	1
GRIP-SCREW DRIVER (Ref # 92106)	92106-1001	1
TOOL-DRIVER,#3PHILLIPS (Ref # 92107)	92107-005	1
TOOL-DRIVER,#2PHILLIPS&SLOT (Ref # 92107A)	92107-1051	1
TOOL-WRENCH,ALLEN,4MM (Ref # 92110)	92110-3703	1
TOOL-WRENCH,ALLEN,6MM (Ref # 92127)	92127-003	1
BOLT-SOCKET,5X18 (Ref # 120)	120CB0518	2

© 2026 Kawasaki Motors Corp., U.S.A.