2023 NINJA® ZX™-6R

PARTS DIAGRAM

Seat

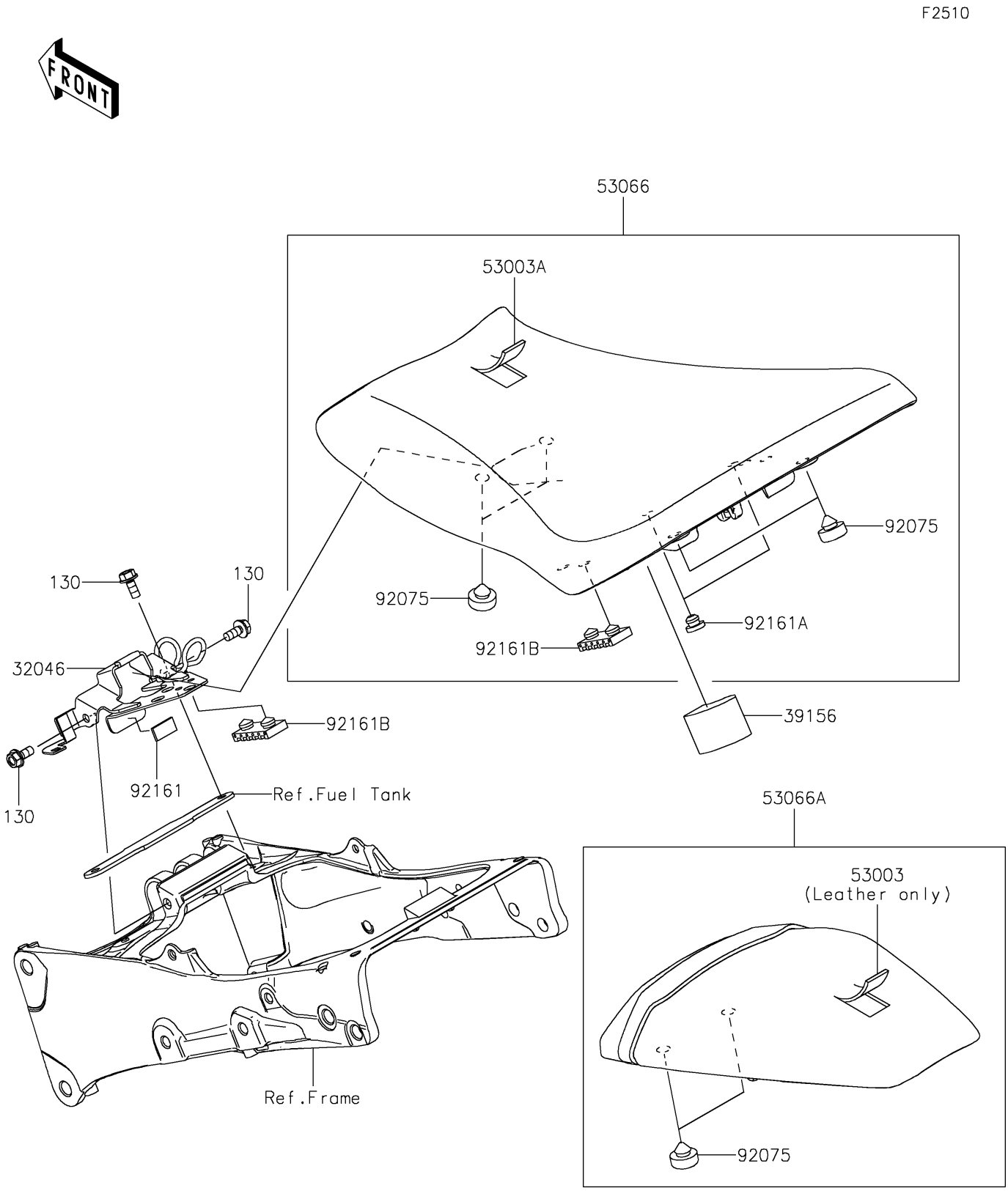

© 2026 Kawasaki Motors Corp., U.S.A.

2023 NINJA® ZX™-6R

PARTS LIST

Seat

ITEM NAME	PART NUMBER	QUANTITY
BRACKET-SEAT (Ref # 32046)	32046-0431	1
PAD (Ref # 39156)	39156-2465	1
LEATHER,RR SEAT,BLACK (Ref # 53003)	53003-0420-MA	1
LEATHER,FRONT SEAT,BLACK (Ref # 53003A)	53003-0471-MA	1
SEAT-ASSY,FR,BLACK (Ref # 53066)	53066-0606-MA	1
SEAT-ASSY,RR,BLACK+BLK (Ref # 53066A)	53066-0607-12Y	1
DAMPER,10X20X8 (Ref # 92075)	92075-1927	6
DAMPER (Ref # 92161)	92161-0726	1
DAMPER (Ref # 92161A)	92161-1084	2
DAMPER,SEAT (Ref # 92161B)	92161-1489	3
BOLT-FLANGED,6X14 (Ref # 130)	130BC0614	3

© 2026 Kawasaki Motors Corp., U.S.A.