2026 Z1100 SE ABS PARTS DIAGRAM

Oil Pan

E1434

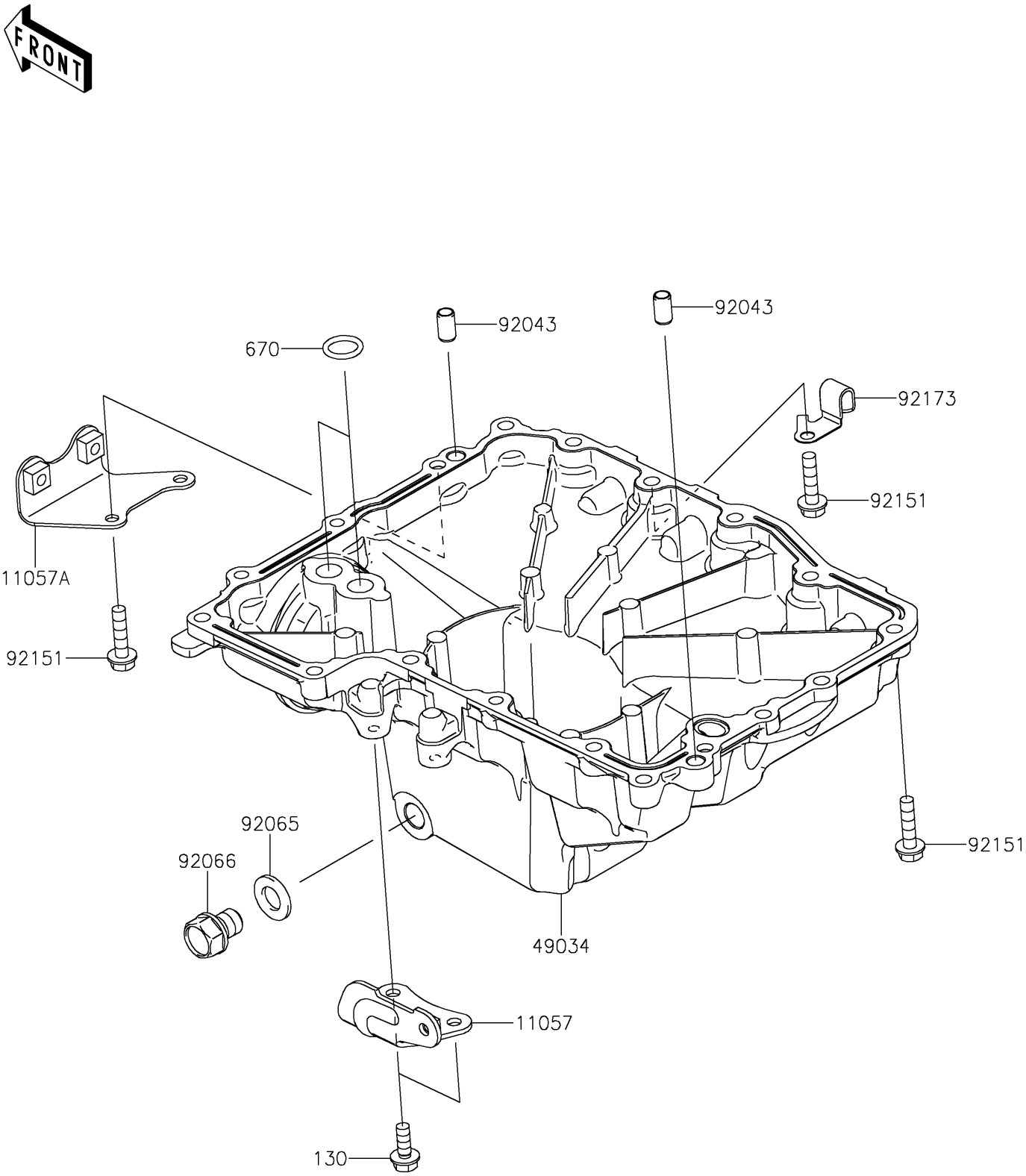

© 2025 Kawasaki Motors Corp., U.S.A.

2026 Z1100 SE ABS PARTS LIST

Oil Pan

ITEM NAME	PART NUMBER	QUANTITY
BRACKET,LWR COWL.,LH (Ref # 11057)	11057-0713	1
BRACKET,LWR COWLING,FR,OIL PAN (Ref # 11057A)	11057-1726	1
PAN-OIL (Ref # 49034)	49034-0592	1
PIN,6.2X8X14 (Ref # 92043)	92043-1263	2
GASKET,12X22X2 (Ref # 92065)	92065-097	1
PLUG,12X15 (Ref # 92066)	92066-0079	1
BOLT,FLANGED,6X25 (Ref # 92151)	92151-1225	18
CLAMP,OIL PAN (Ref # 92173)	92173-1917	1
BOLT-FLANGED,6X16 (Ref # 130)	130CC0616	2
O RING,14MM (Ref # 670)	670D2014	2

© 2025 Kawasaki Motors Corp., U.S.A.