2026 Ninja 500 PARTS DIAGRAM

Fuel Injection

E1530

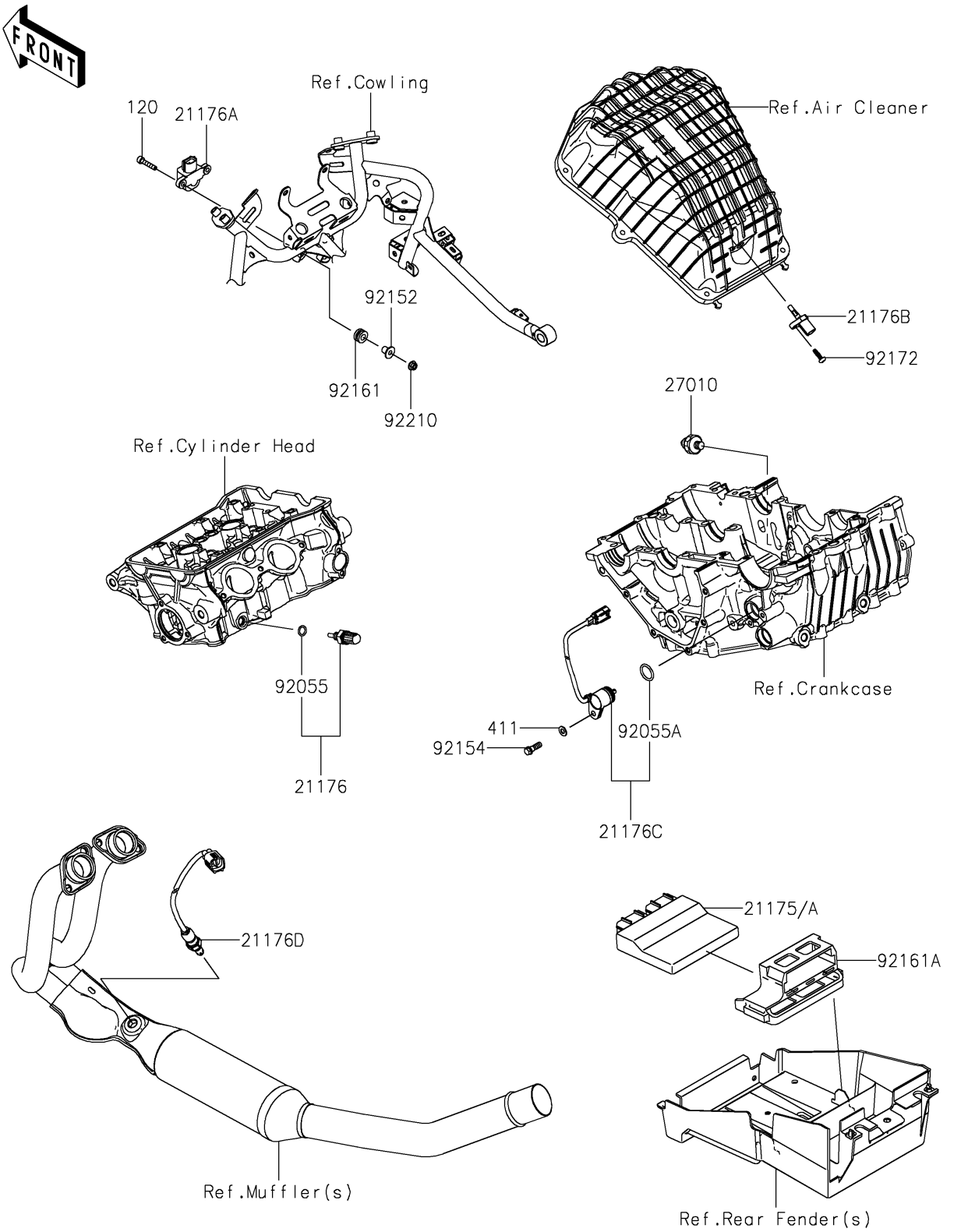

© 2025 Kawasaki Motors Corp., U.S.A.

2026 Ninja 500 PARTS LIST

Fuel Injection

ITEM NAME	PART NUMBER	QUANTITY
CONTROL UNIT-ELECTRONIC (Ref # 21175)	21175-1982	1
CONTROL UNIT-ELECTRONIC (Ref # 21175A)	21175-1983	1
SENSOR,WATER TEMP (Ref # 21176)	21176-0009	1
SENSOR,VEHICLE-DOWN (Ref # 21176A)	21176-0026	1
SENSOR,AIR TEMPERATURE (Ref # 21176B)	21176-0048	1
SENSOR,GEAR POSITION (Ref # 21176C)	21176-0852	1
SENSOR,OXYGEN (Ref # 21176D)	21176-1202	1
SWITCH,OIL PRESSURE (Ref # 27010)	27010-1313	1
RING-O,9.5X1.9 (Ref # 92055)	92055-0016	1
RING-O (Ref # 92055A)	92055-0917	1
COLLAR,5.6X8X11.2 (Ref # 92152)	92152-1562	2
BOLT (Ref # 92154)	92154-3764	1
DAMPER,8X16X8.6 (Ref # 92161)	92161-0685	2
DAMPER (Ref # 92161A)	92161-2437	1
SCREW,TAPPING,5X16 (Ref # 92172)	92172-0790	1
NUT,FLANGED,5MM (Ref # 92210)	92210-0007	2
BOLT-SOCKET,5X25 (Ref # 120)	120CA0525	2
WASHER-PLAIN,6MM (Ref # 411)	411AA0600	1

© 2025 Kawasaki Motors Corp., U.S.A.