1993 KDX200 PARTS DIAGRAM

Fuel Tank

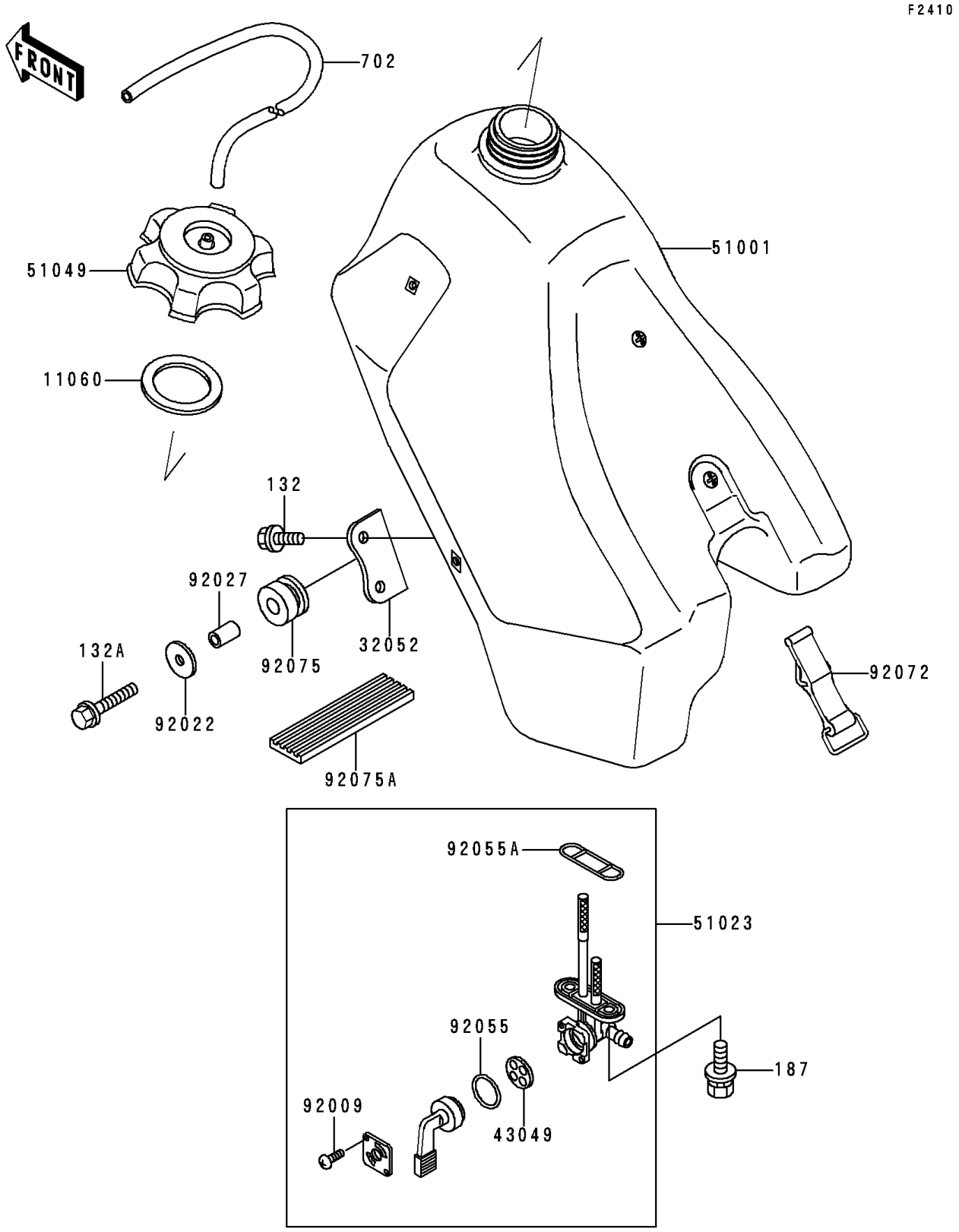

© 2026 Kawasaki Motors Corp., U.S.A.

1993 KDX200 PARTS LIST

Fuel Tank

ITEM NAME	PART NUMBER	QUANTITY
BOLT-FLANGED-SMALL (Ref # 132)	132G0612	4
BOLT-FLANGED-SMALL (Ref # 132A)	132G0630	2
BOLT-UPSET-WSP (Ref # 187)	187B0616	2
TUBE-RUBBER,5X350 (Ref # 702)	702A05350	1
GASKET,FUEL TANK CAP (Ref # 11060)	11060-1340	1
BRACKET-TANK (Ref # 32052)	32052-1169	2
PACKING,FUEL TAP LEVER (Ref # 43049)	43049-1017	1
TANK-COMP-FUEL,L.GREEN (Ref # 51001)	51001-1301-6W	1
TAP-ASSY,FUEL (Ref # 51023)	51023-1165	1
CAP-TANK,FUEL (Ref # 51049)	51049-1089	1
SCREW,3X5 (Ref # 92009)	92009-1123	2
WASHER,6.5X24X2 (Ref # 92022)	92022-1690	2
COLLAR,6.8X10X17 (Ref # 92027)	92027-1833	2
RING-O,FUEL TAP LEVER (Ref # 92055)	92055-1111	1
RING-O,FUEL TAP PACKING (Ref # 92055A)	92055-1348	1
BAND,FUEL TANK (Ref # 92072)	92072-1229	1
DAMPER (Ref # 92075)	92075-1660	2
DAMPER,FUEL TANK (Ref # 92075A)	92075-1987	1

© 2026 Kawasaki Motors Corp., U.S.A.