2009 Teryx® 750 FI 4x4 LE PARTS DIAGRAM

Ignition Switch

F2770

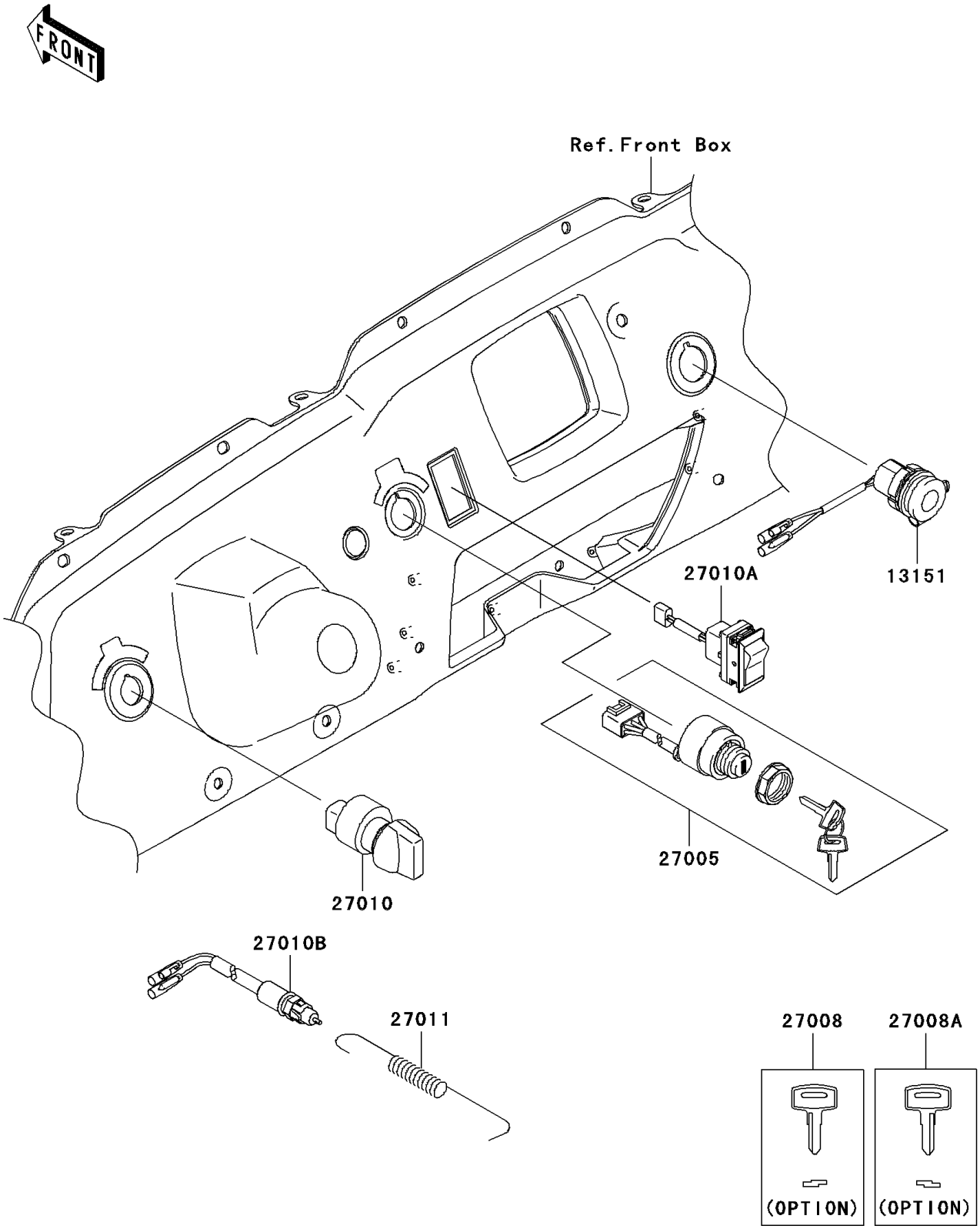

© 2024 Kawasaki Motors Corp., U.S.A.

2009 Teryx® 750 FI 4x4 LE PARTS LIST

Ignition Switch

ITEM NAME	PART NUMBER	QUANTITY
SWITCH-COMP,D.C.TERMINAL (Ref # 13151)	13151-0003	1
SWITCH-ASSY-IGNITION (Ref # 27005)	27005-0036	1
KEY-LOCK,BLANK (Ref # 27008)	27008-1153	1
KEY-LOCK,BLANK (Ref # 27008A)	27008-1157	1
SWITCH,HEAD LAMP (Ref # 27010)	27010-0067	1
SWITCH,2/4WD (Ref # 27010A)	27010-0068	1
SWITCH,REAR BRAKE (Ref # 27010B)	27010-1475	1
SPRING,BRAKE LAMP SWITCH (Ref # 27011)	27011-006	1

© 2024 Kawasaki Motors Corp., U.S.A.