2003 Ninja® ZX™-9R PARTS DIAGRAM

Rear Wheel/Chain

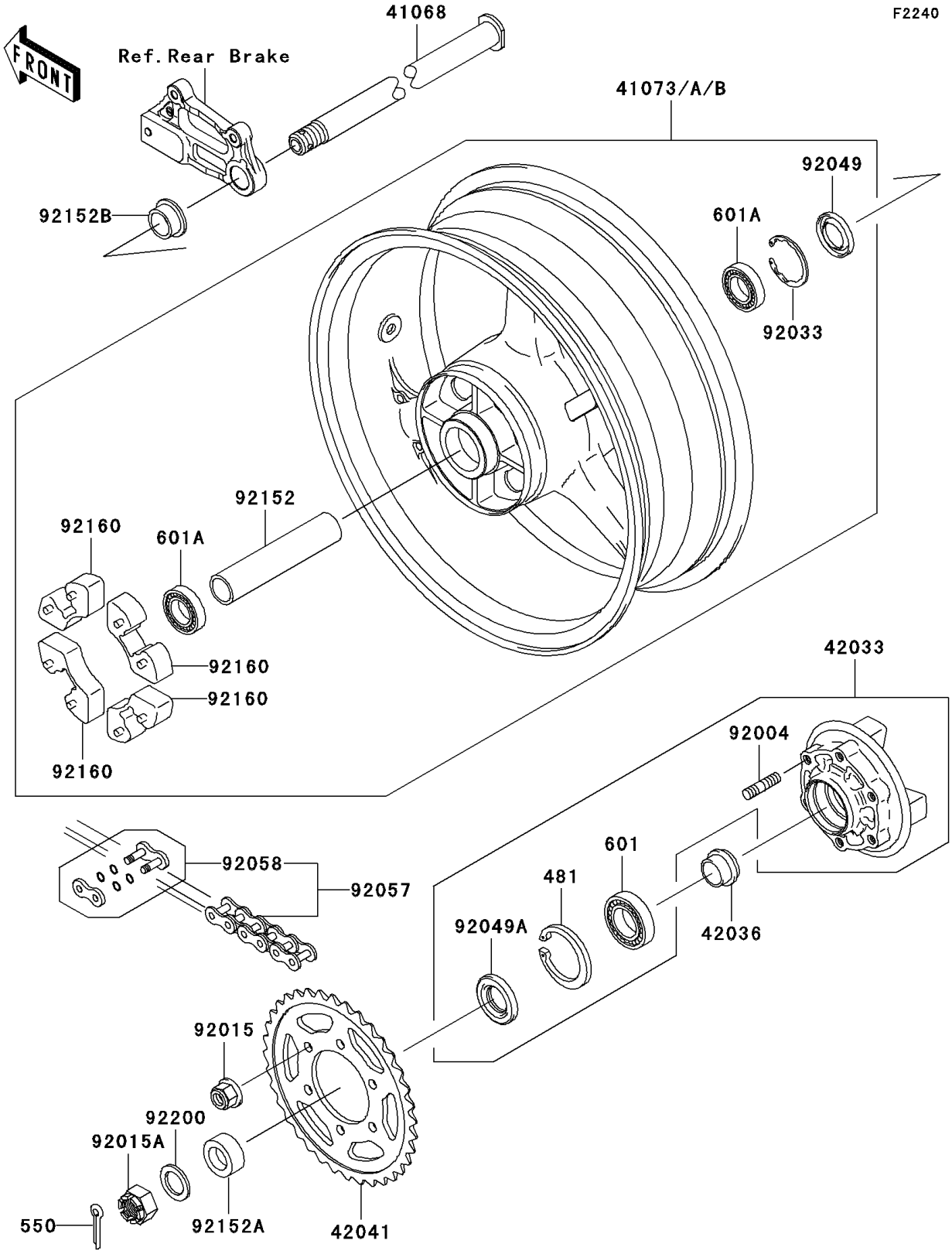

© 2024 Kawasaki Motors Corp., U.S.A.

2003 Ninja® ZX™-9R PARTS LIST

Rear Wheel/Chain

ITEM NAME	PART NUMBER	QUANTITY
CIRCLIP (Ref # 481)	481J5500	1
PIN-COTTER,4.0X40 (Ref # 550)	550D4040	1
BEARING-BALL,#6006G (Ref # 601)	601B6006G	1
BEARING-BALL (Ref # 601A)	601B6205UU	2
AXLE,RR (Ref # 41068)	41068-1420	1
WHEEL-ASSY,RR,C.GRAY (Ref # 41073A)	41073-1653-DH	1
COUPLING-ASSY,RR HUB (Ref # 42033)	42033-1213	1
SLEEVE,RR HUB,L=22 (Ref # 42036)	42036-1279	1
SPROCKET-HUB,41T (Ref # 42041)	42041-1547	1
STUD,10X19 (Ref # 92004)	92004-1275	6
NUT,FLANGED,10MM (Ref # 92015)	92015-1335	6
NUT,CASTLE,24MM (Ref # 92015A)	92015-1844	1
RING-SNAP,52MM (Ref # 92033)	92033-1043	1
SEAL-OIL,RR HUB,L=159 (Ref # 92049)	92049-1375	1
SEAL-OIL,PJN 40 55 8 (Ref # 92049A)	92049-1376	1
CHAIN,DRIVE,EK525UVXL2X110L (Ref # 92057)	92057-1512	1
JOINT-CHAIN,DRIVE (Ref # 92058)	92058-1089	1
COLLAR,RR HUB,L=159 (Ref # 92152)	92152-1208	1
COLLAR,RR AXLE,LH,L=17 (Ref # 92152A)	92152-1245	1
COLLAR,RR AXLE,RH,L=16 (Ref # 92152B)	92152-1246	1
DAMPER,SHOCK,RR HUB (Ref # 92160)	92160-1485	4
WASHER,25.5X38X3.2 (Ref # 92200)	92200-1479	1

© 2024 Kawasaki Motors Corp., U.S.A.