2026 KLR650 Adventure ABS PARTS DIAGRAM

Front Hub

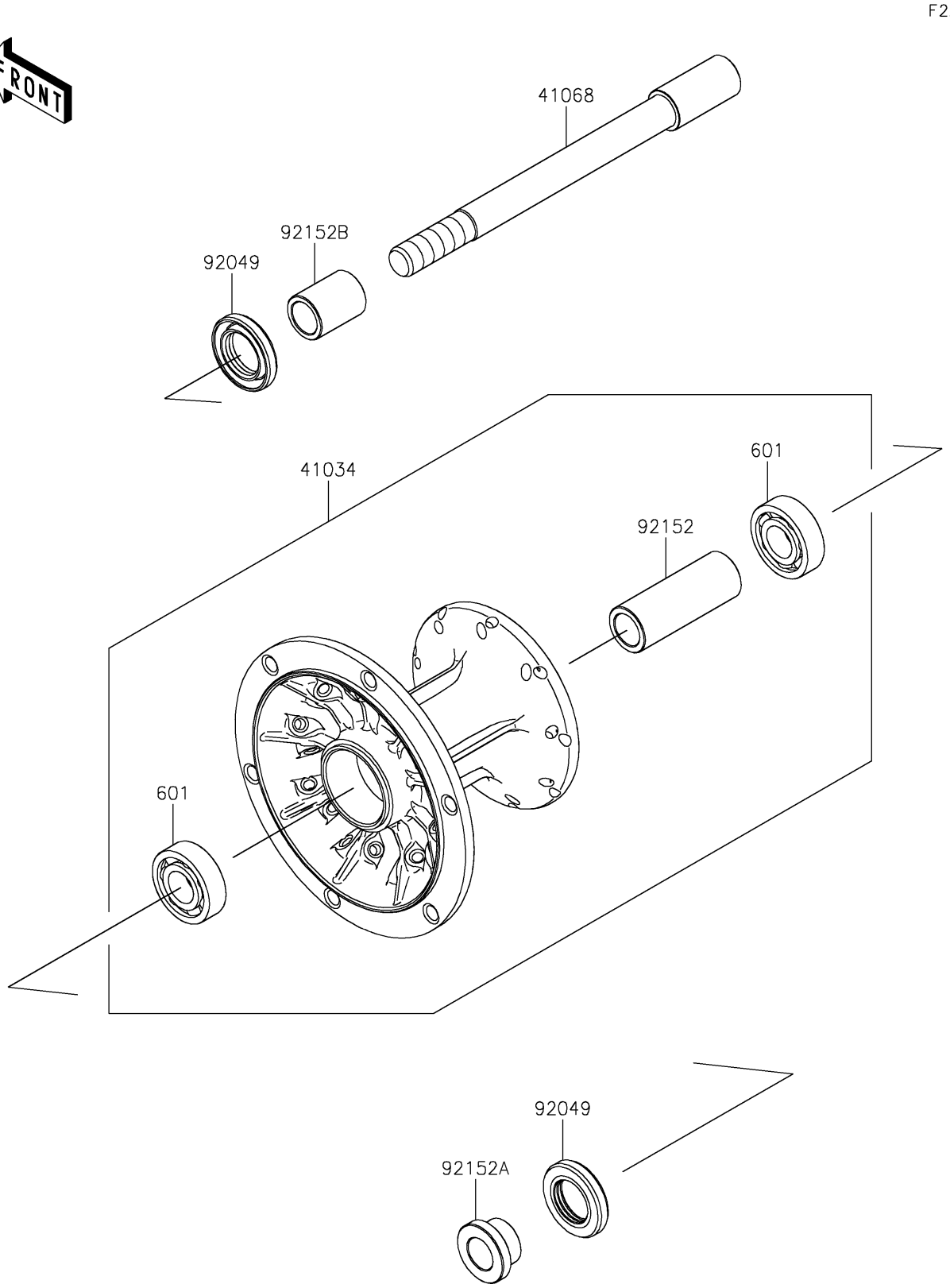

© 2025 Kawasaki Motors Corp., U.S.A.

2026 KLR650 Adventure ABS PARTS LIST

Front Hub

ITEM NAME	PART NUMBER	QUANTITY
DRUM-ASSY,FR (Ref # 41034)	41034-0608	1
AXLE,FR (Ref # 41068)	41068-0658	1
SEAL-OIL,23X40X7 (Ref # 92049)	92049-0801	2
COLLAR,17.2X25X67.5 (Ref # 92152)	92152-2732	1
COLLAR,LH (Ref # 92152A)	92152-2733	1
COLLAR,RH (Ref # 92152B)	92152-2734	1
BEARING-BALL,#6203UG (Ref # 601)	601B6203UG	2

© 2025 Kawasaki Motors Corp., U.S.A.