2026 KLR650 Adventure ABS PARTS DIAGRAM

Suspension/Shock Absorber

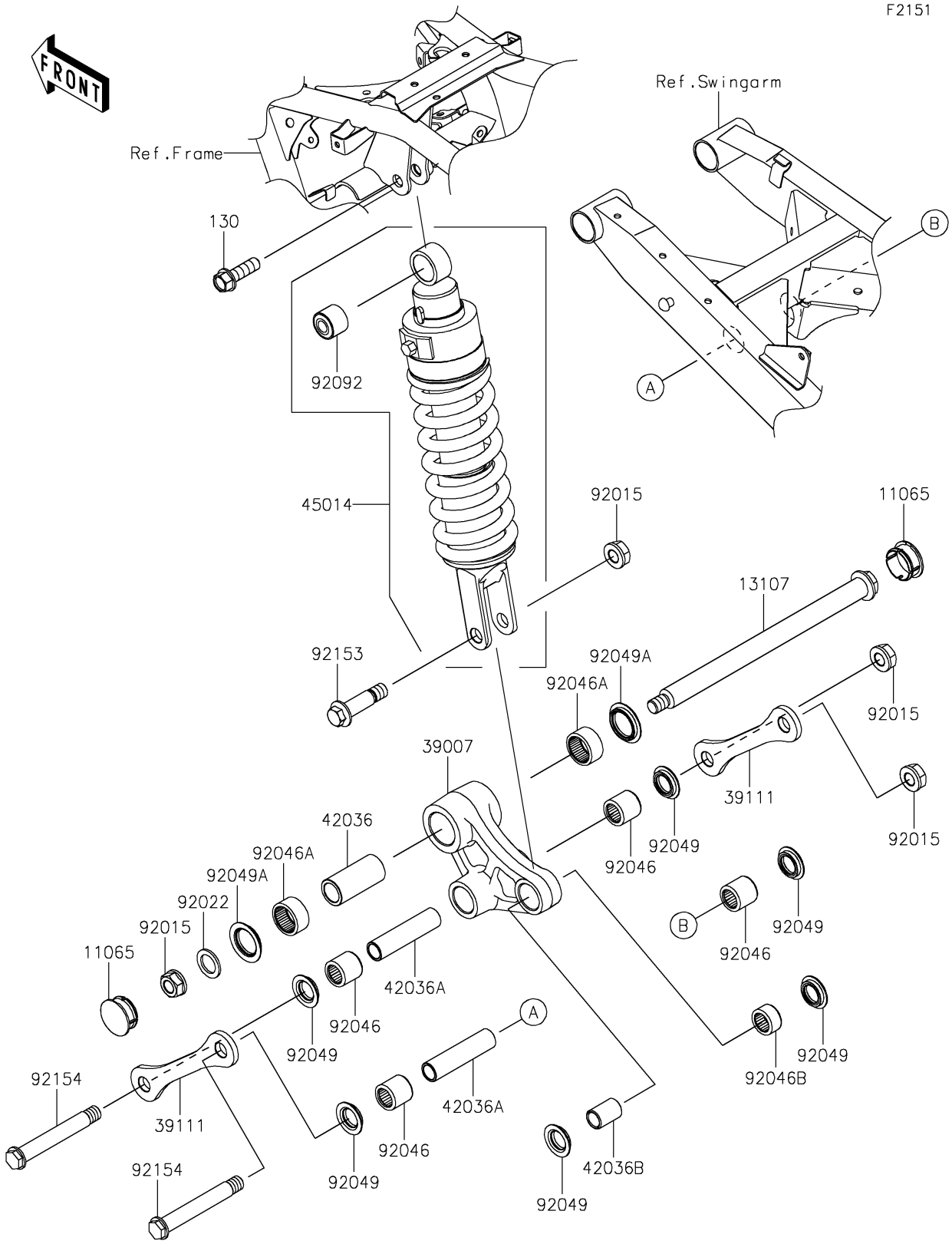

© 2025 Kawasaki Motors Corp., U.S.A.

2026 KLR650 Adventure ABS PARTS LIST

Suspension/Shock Absorber

ITEM NAME	PART NUMBER	QUANTITY
CAP,32X14 (Ref # 11065)	11065-0822	2
SHAFT,SUSPENSION ARM (Ref # 13107)	13107-0928	1
ARM-SUSP,UNI TRAK (Ref # 39007)	39007-0075	1
ROD-TIE,SUSPENSION (Ref # 39111)	39111-0386	2
SLEEVE,20X28X60 (Ref # 42036)	42036-0071	1
SLEEVE,15X20X82 (Ref # 42036A)	42036-0072	2
SLEEVE,15X20X30 (Ref # 42036B)	42036-0073	1
SHOCKABSORBER (Ref # 45014)	45014-0693	1
NUT,14MM (Ref # 92015)	92015-1459	4
WASHER,20X30X2.3 (Ref # 92022)	92022-1568	1
BEARING-NEEDLE,BM202726 (Ref # 92046)	92046-1110	4
BEARING-NEEDLE,BM2817 (Ref # 92046A)	92046-1111	2
BEARING-NEEDLE,BM202715 (Ref # 92046B)	92046-1112	1
SEAL-OIL,ARM (Ref # 92049)	92049-1109	6
SEAL-OIL,28X34X5.7 (Ref # 92049A)	92049-1181	2
BUSHING-RUBBER (Ref # 92092)	92092-1063	1
BOLT,FLANGED,14X56 (Ref # 92153)	92153-1692	1
BOLT,FLANGED,14X108 (Ref # 92154)	92154-1427	2
BOLT-FLANGED,12X40 (Ref # 130)	130BA1240	1

© 2025 Kawasaki Motors Corp., U.S.A.