2026 KLR650 Adventure ABS PARTS DIAGRAM

Crankshaft

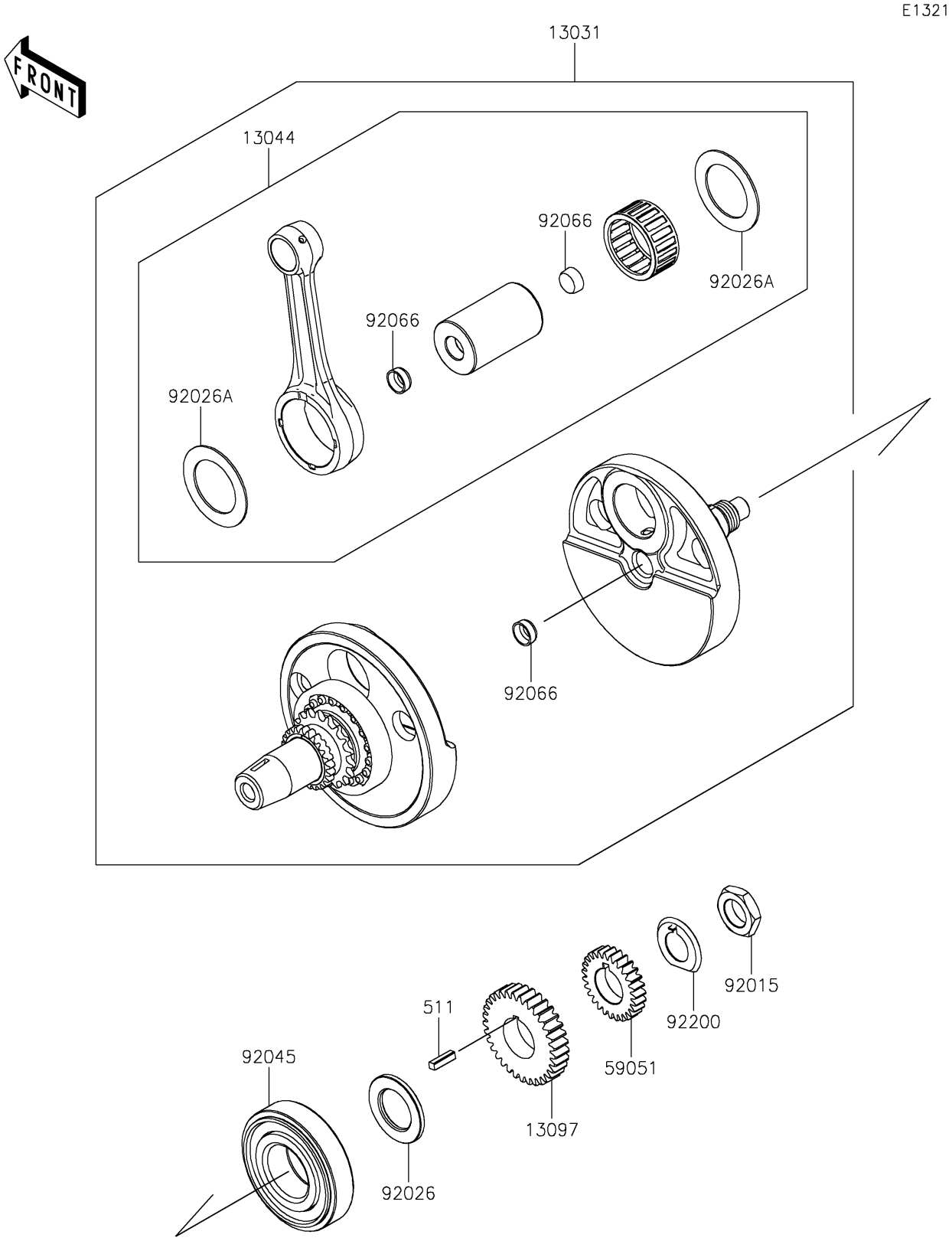

© 2025 Kawasaki Motors Corp., U.S.A.

2026 KLR650 Adventure ABS PARTS LIST

Crankshaft

ITEM NAME	PART NUMBER	QUANTITY
CRANKSHAFT-COMP (Ref # 13031)	13031-0977	1
SET-CONNECTING ROD (Ref # 13044)	13044-5089	1
GEAR-PRIMARY SPUR,33T (Ref # 13097)	13097-1333	1
GEAR-SPUR,27T (Ref # 59051)	59051-1145	1
NUT,22MM (Ref # 92015)	92015-1890	1
SPACER (Ref # 92026)	92026-0150	1
SPACER,40X60X1.5 (Ref # 92026A)	92026-0152	2
BEARING-BALL,40X90X23 (Ref # 92045)	92045-0065	1
PLUG (Ref # 92066)	92066-1154	3
WASHER (Ref # 92200)	92200-0557	1
KEY-SUNK (Ref # 511)	511A0520	1

© 2025 Kawasaki Motors Corp., U.S.A.