# 2026 KLR650 Adventure ABS PARTS DIAGRAM

## Camshaft(s)/Tensioner

E1230

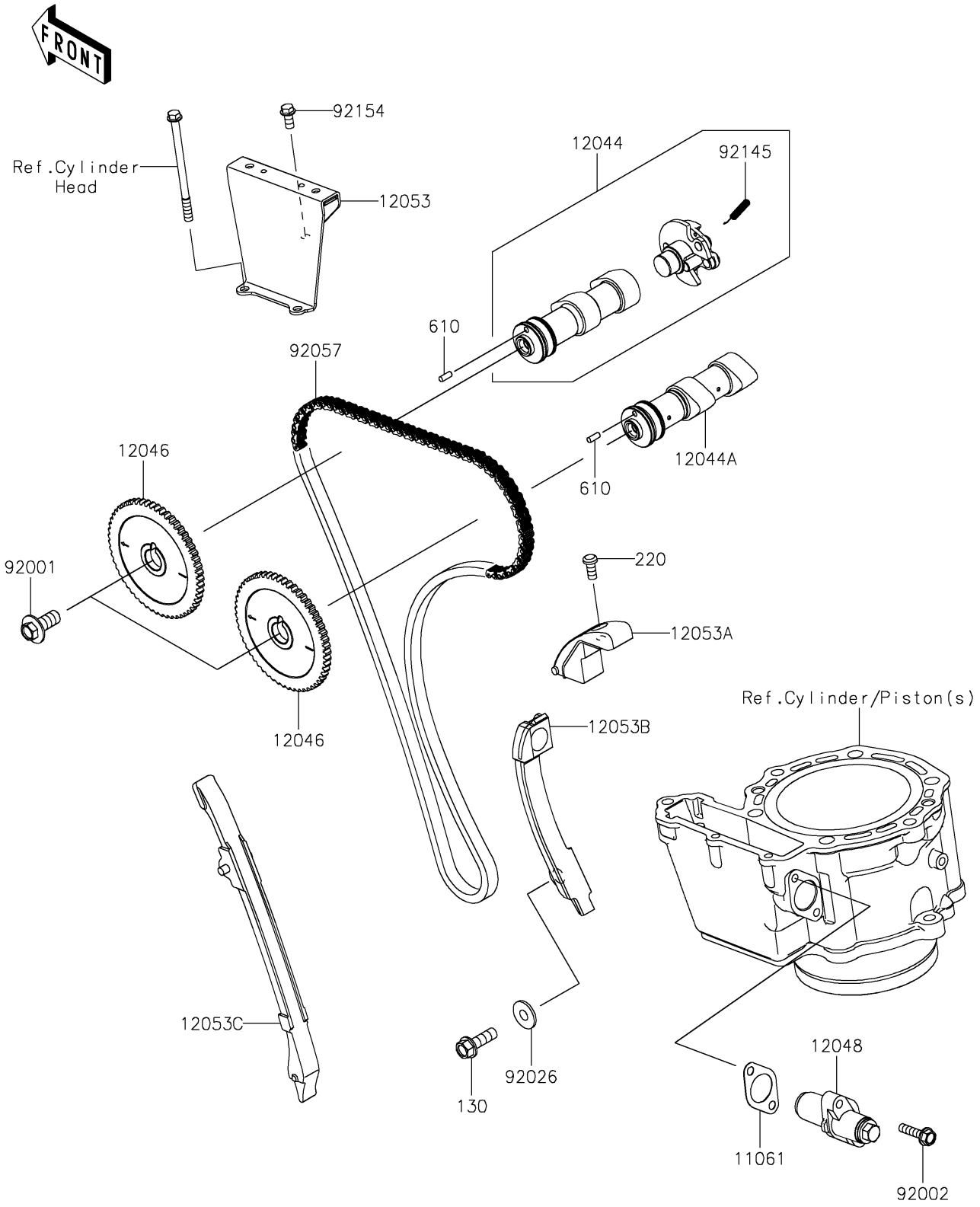


© 2025 Kawasaki Motors Corp., U.S.A.

# 2026 KLR650 Adventure ABS PARTS LIST

Camshaft(s)/Tensioner

| ITEM NAME | PART NUMBER | QUANTITY |
|---|---|---|
| GASKET,TENSIONER (Ref # 11061) | 11061-0427 | 1 |
| CAMSHAFT-VALVE,EXHAUST (Ref # 12044) | 12044-1522 | 1 |
| CAMSHAFT-VALVE,INTAKE (Ref # 12044A) | 12044-1523 | 1 |
| SPROCKET,48T (Ref # 12046) | 12046-1160 | 2 |
| TENSIONER-ASSY,CAM CHAIN (Ref # 12048) | 12048-1141 | 1 |
| GUIDE-CHAIN,UPP (Ref # 12053) | 12053-0314 | 1 |
| GUIDE-CHAIN,LWR (Ref # 12053A) | 12053-1134 | 1 |
| GUIDE-CHAIN,RR (Ref # 12053B) | 12053-1222 | 1 |
| GUIDE-CHAIN,FR (Ref # 12053C) | 12053-1223 | 1 |
| BOLT,10X23 (Ref # 92001) | 92001-1859 | 2 |
| BOLT,FLANGED,6X25 (Ref # 92002) | 92002-1086 | 2 |
| SPACER (Ref # 92026) | 92026-1146 | 1 |
| CHAIN,CAM,92RH2015 (Ref # 92057) | 92057-0671 | 1 |
| SPRING,DECOMPRESSOR (Ref # 92145) | 92145-1984 | 1 |
| BOLT,FLANGED,6X12 (Ref # 92154) | 92154-0358 | 1 |
| BOLT-FLANGED,8X25 (Ref # 130) | 130BA0825 | 1 |
| SCREW-PAN-CROS,6X14 (Ref # 220) | 220AA0614 | 1 |
| ROLLER,4X10 (Ref # 610) | 610A0410 | 2 |

© 2025 Kawasaki Motors Corp., U.S.A.