2026 KLR650 PARTS DIAGRAM

Air Cleaner

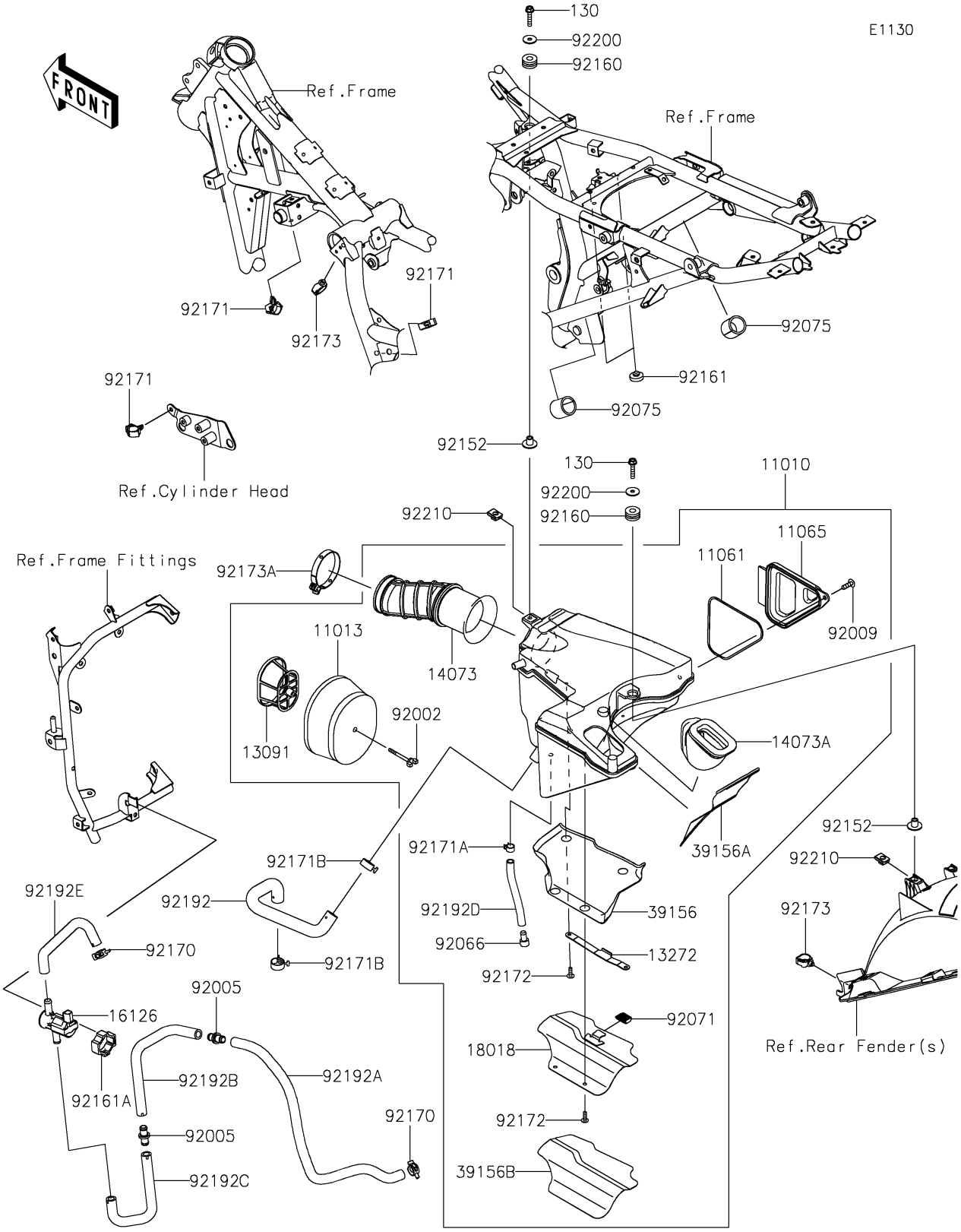

© 2026 Kawasaki Motors Corp., U.S.A.

2026 KLR650 PARTS LIST

Air Cleaner

ITEM NAME	PART NUMBER	QUANTITY
FILTER-ASSY-AIR (Ref # 11010)	11010-1805	1
ELEMENT-AIR FILTER (Ref # 11013)	11013-1152	1
GASKET (Ref # 11061)	11061-1393	1
CAP (Ref # 11065)	11065-1373	1
HOLDER (Ref # 13091)	13091-1473	1
PLATE (Ref # 13272)	13272-3875	1
DUCT (Ref # 14073)	14073-0993	1
DUCT (Ref # 14073A)	14073-0994	1
VALVE,AIR SWITCHING (Ref # 16126)	16126-0033	1
PLATE-HEAT GUARD (Ref # 18018)	18018-0641	1
PAD (Ref # 39156)	39156-2760	1
PAD (Ref # 39156A)	39156-2761	1
PAD (Ref # 39156B)	39156-2793	1
BOLT (Ref # 92002)	92002-1904	1
FITTING (Ref # 92005)	92005-1379	2
SCREW (Ref # 92009)	92009-1460	1
PLUG,DRAIN,8.5X15 (Ref # 92066)	92066-0127	1
GROMMET (Ref # 92071)	92071-0786	1
DAMPER,25X31X30 (Ref # 92075)	92075-1906	2
COLLAR,6.5X10.5X13.1 (Ref # 92152)	92152-0547	2
DAMPER (Ref # 92160)	92160-1162	2
DAMPER (Ref # 92161)	92161-0336	2
DAMPER,ASWV (Ref # 92161A)	92161-0499	1
CLAMP (Ref # 92170)	92170-1118	2
CLAMP,BRAKE HOSE (Ref # 92171)	92171-0316	3
CLAMP,12MM (Ref # 92171A)	92171-1870	1
CLAMP (Ref # 92171B)	92171-1890	2
SCREW,TAPPING,5X16 (Ref # 92172)	92172-0280	4
CLAMP,HOLDER CLIP (Ref # 92173)	92173-0868	2

© 2026 Kawasaki Motors Corp., U.S.A.

2026 KLR650 PARTS LIST

Air Cleaner

ITEM NAME	PART NUMBER	QUANTITY
CLAMP,62MM (Ref # 92173A)	92173-0922	1
TUBE,BREATHER (Ref # 92192)	92192-2463	1
TUBE,FITTING-A/C (Ref # 92192A)	92192-2464	1
TUBE,FITTING-FITTING (Ref # 92192B)	92192-2465	1
TUBE,ASWV-FITTING (Ref # 92192C)	92192-2466	1
TUBE (Ref # 92192D)	92192-2493	1
TUBE,ASWV-REED VALVE (Ref # 92192E)	92192-2500	1
WASHER,6.5X22X1.6 (Ref # 92200)	92200-1087	2
NUT,6MM (Ref # 92210)	92210-0474	2
BOLT-FLANGED,6X30 (Ref # 130)	130BB0630	2

© 2026 Kawasaki Motors Corp., U.S.A.