2026 KLR650 PARTS DIAGRAM

Owner's Tools

F2810

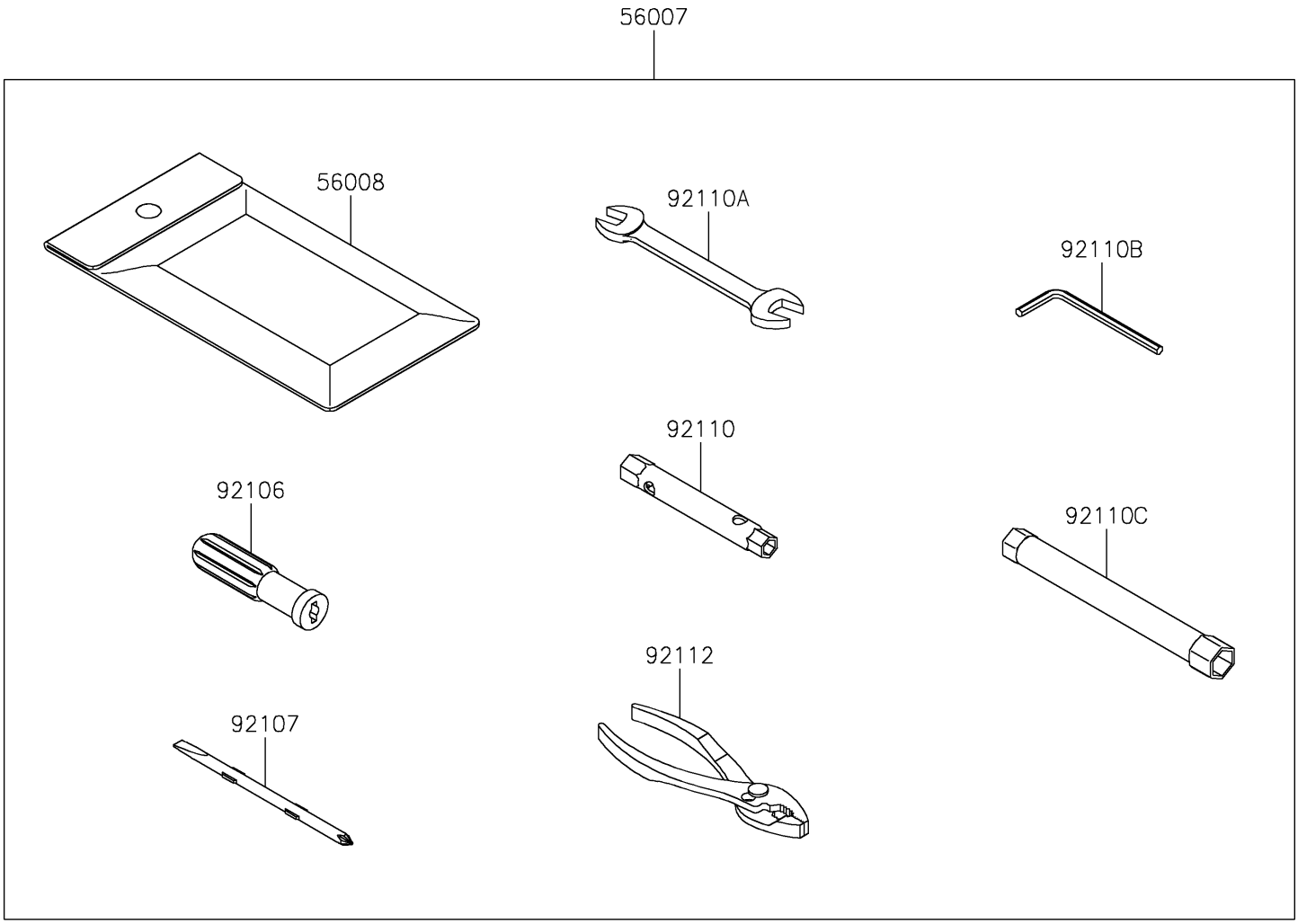

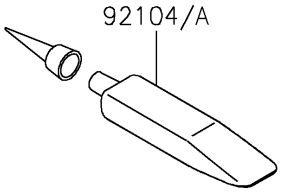

© 2025 Kawasaki Motors Corp., U.S.A.

2026 KLR650 PARTS LIST

Owner's Tools

ITEM NAME	PART NUMBER	QUANTITY
TOOL-KIT (Ref # 56007)	56007-0196	1
BAG,TOOL (Ref # 56008)	56008-0036	1
GASKET-LIQUID,TB1211F,CLEAR (Ref # 92104)	92104-0004	1
GASKET-LIQUID,TB1216B,BLACK (Ref # 92104A)	92104-1064	1
GRIP-SCREW DRIVER (Ref # 92106)	92106-0004	1
TOOL-DRIVER,#2PHILLIPS&SLOT (Ref # 92107)	92107-0019	1
TOOL-WRENCH,BOX,8X10 (Ref # 92110)	92110-0049	1
TOOL-WRENCH,OPEN END,14X17 (Ref # 92110A)	92110-0057	1
TOOL-WRENCH,ALLEN,4MM (Ref # 92110B)	92110-0567	1
TOOL-WRENCH,BOX,12MM (Ref # 92110C)	92110-0579	1
TOOL-PLIERS (Ref # 92112)	92112-0007	1

© 2025 Kawasaki Motors Corp., U.S.A.