2026 KLR650 PARTS DIAGRAM

Seat

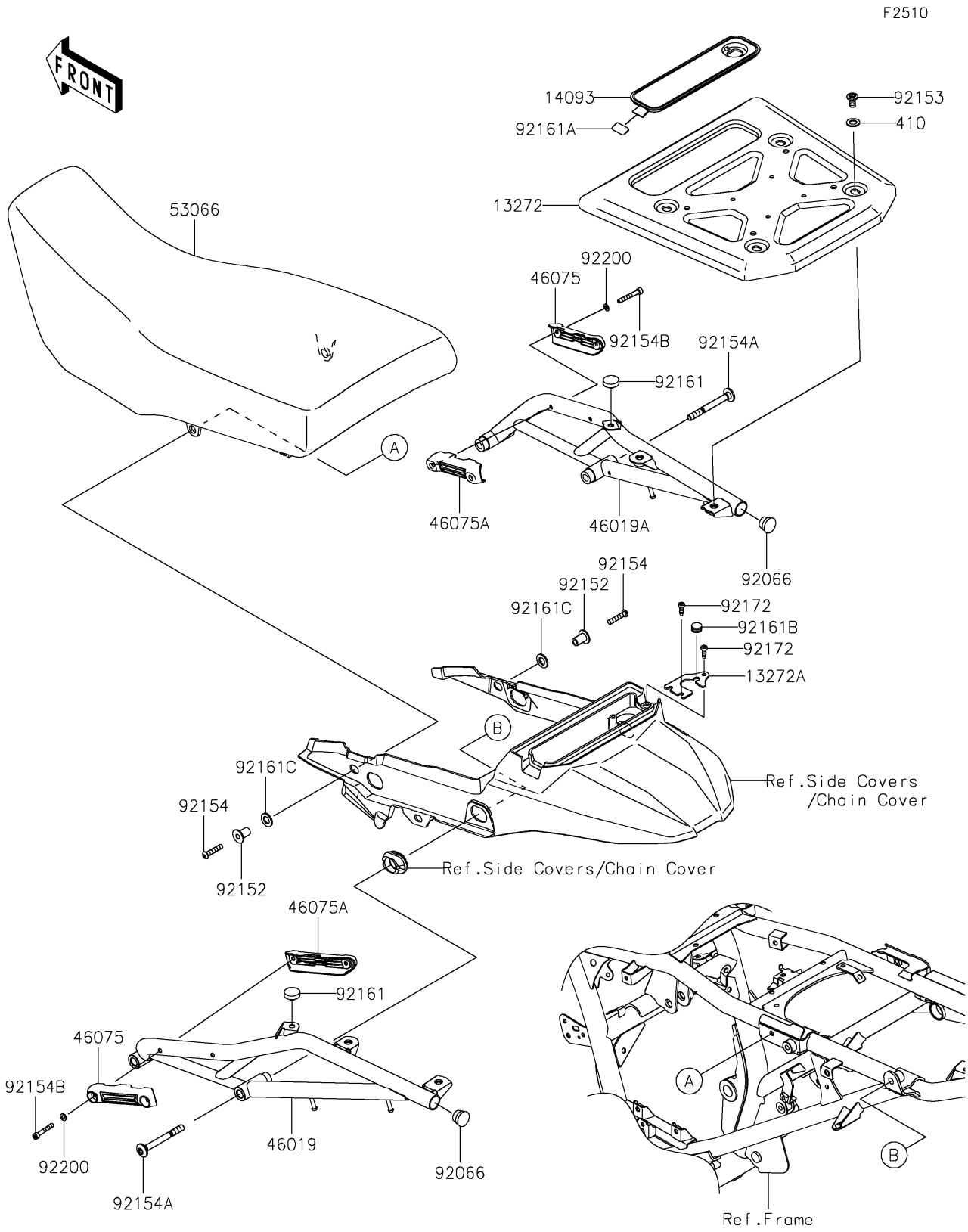

© 2025 Kawasaki Motors Corp., U.S.A.

2026 KLR650 PARTS LIST

Seat

ITEM NAME	PART NUMBER	QUANTITY
PLATE,CARRIER (Ref # 13272)	13272-3763	1
PLATE (Ref # 13272A)	13272-3872	1
COVER,TOOL (Ref # 14093)	14093-1079	1
GRIP-ASSY,LH (Ref # 46019)	46019-0107	1
GRIP-ASSY,RH (Ref # 46019A)	46019-0108	1
GRIP,OUTSIDE (Ref # 46075)	46075-0659	2
GRIP,INSIDE (Ref # 46075A)	46075-0660	2
SEAT-ASSY,DUAL,BLACK+SIL (Ref # 53066)	53066-0703-64U	1
PLUG (Ref # 92066)	92066-1220	2
COLLAR (Ref # 92152)	92152-2823	2
BOLT,SOCKET,8X15 (Ref # 92153)	92153-1810	4
BOLT,SOCKET,6X30 (Ref # 92154)	92154-0206	2
BOLT,SOCKET,8X78 (Ref # 92154A)	92154-4346	4
BOLT,SOCKET,5X35 (Ref # 92154B)	92154-4350	4
DAMPER (Ref # 92161)	92161-0336	2
DAMPER,12X23 (Ref # 92161A)	92161-1367	1
DAMPER,8X14X8.9 (Ref # 92161B)	92161-1666	1
DAMPER (Ref # 92161C)	92161-2425	2
SCREW,TAPPING,5X16 (Ref # 92172)	92172-1425	3
WASHER,5.5X10X1.2 (Ref # 92200)	92200-2495	4
WASHER-PLAIN-SMALL,10MM (Ref # 410)	410AA1000	4

© 2025 Kawasaki Motors Corp., U.S.A.