2026 KLR650 PARTS DIAGRAM

Generator

E1810

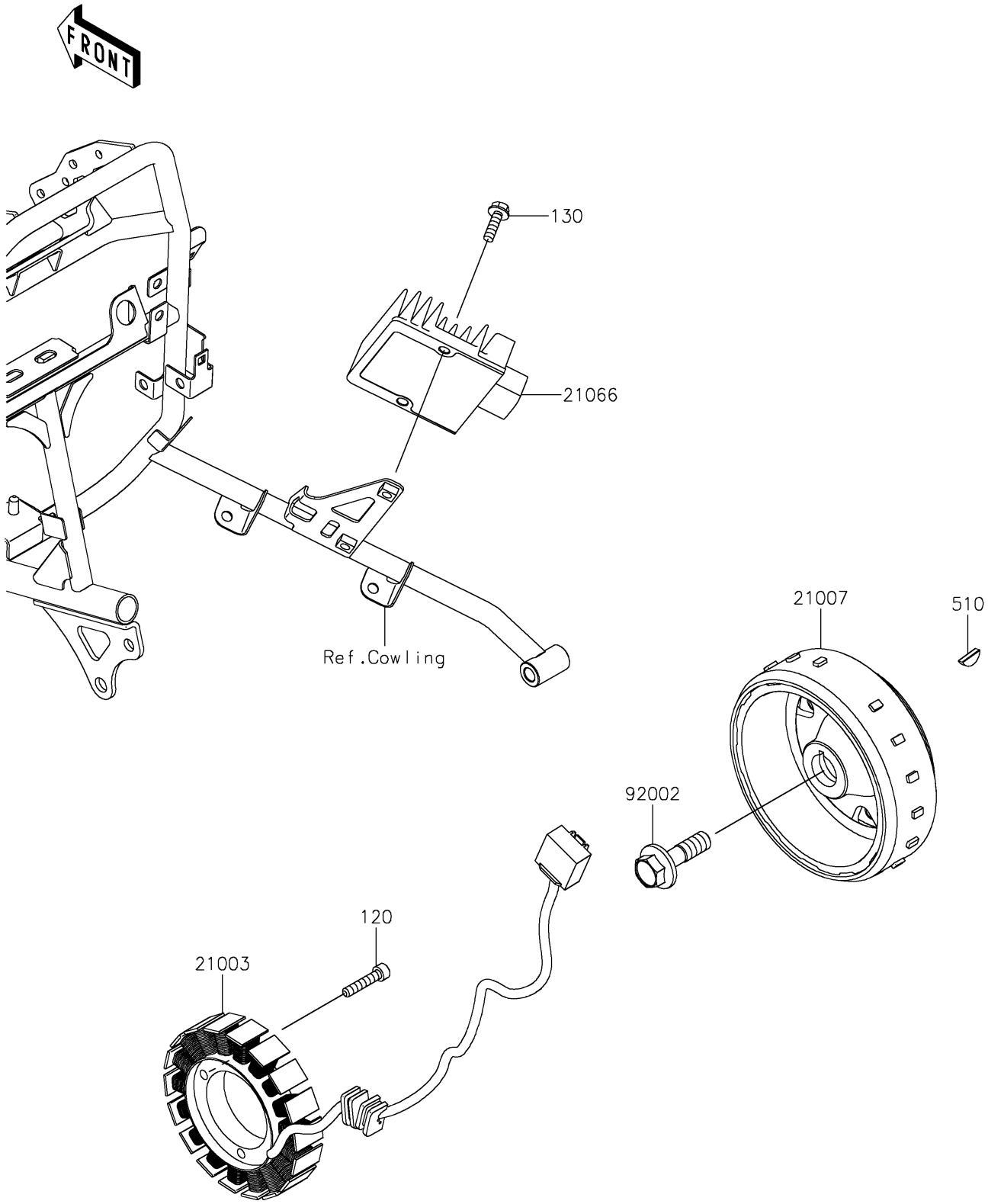

© 2025 Kawasaki Motors Corp., U.S.A.

2026 KLR650 PARTS LIST

Generator

ITEM NAME	PART NUMBER	QUANTITY
STATOR (Ref # 21003)	21003-0208	1
ROTOR (Ref # 21007)	21007-0708	1
REGULATOR-VOLTAGE (Ref # 21066)	21066-0761	1
BOLT,FLANGED,12X40 (Ref # 92002)	92002-1693	1
BOLT-SOCKET,6X30 (Ref # 120)	120CA0630	3
BOLT-FLANGED,6X20 (Ref # 130)	130BA0620	2
KEY-WOODRUFF (Ref # 510)	510A4200	1

© 2025 Kawasaki Motors Corp., U.S.A.