2026 KLR650 PARTS DIAGRAM

Fuel Injection

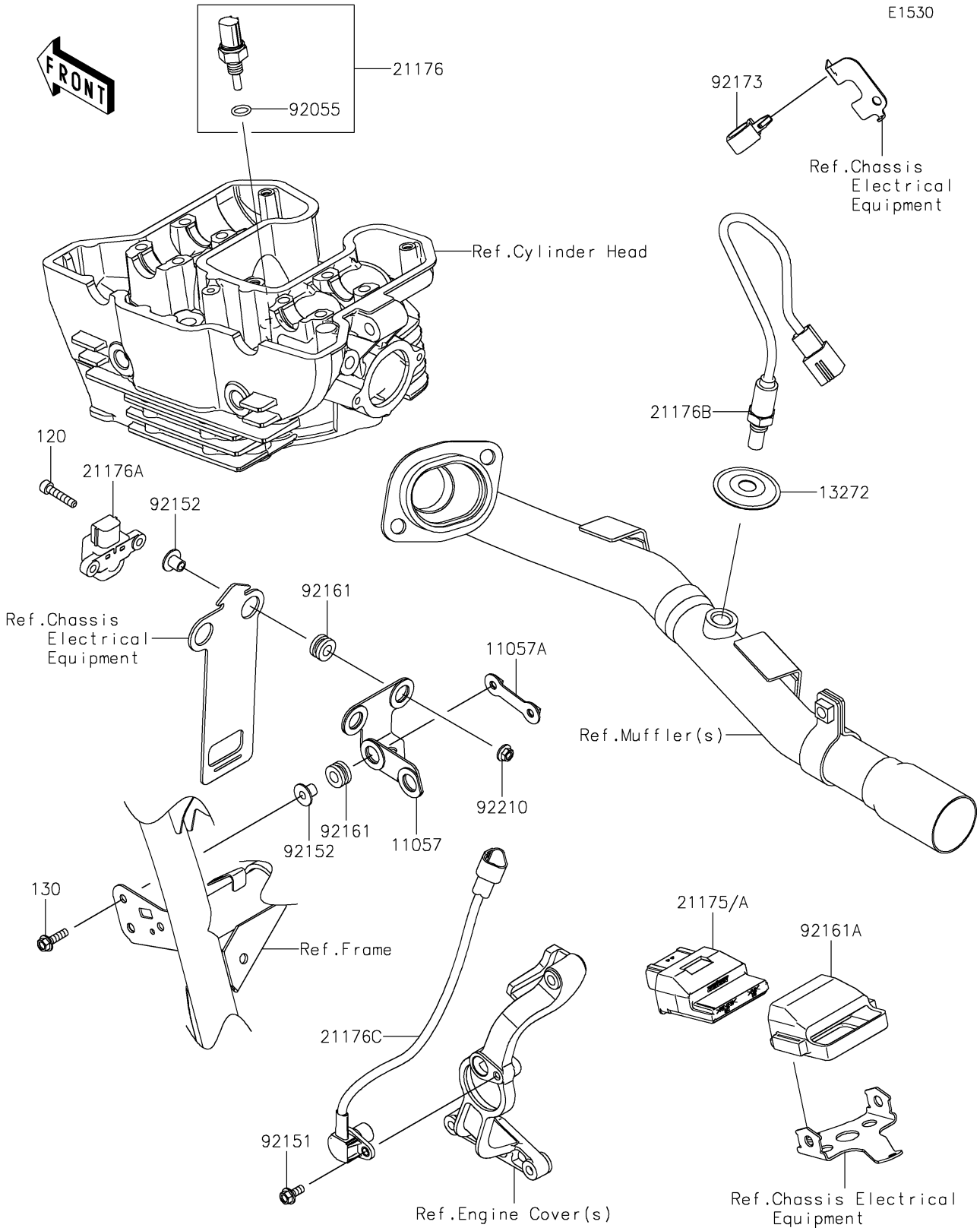

© 2025 Kawasaki Motors Corp., U.S.A.

2026 KLR650 PARTS LIST

Fuel Injection

ITEM NAME	PART NUMBER	QUANTITY
BRACKET,VEHICLE DOWN SENSOR (Ref # 11057)	11057-7429	1
BRACKET (Ref # 11057A)	11057-7434	1
PLATE,O2 SENSOR (Ref # 13272)	13272-3888	1
CONTROL UNIT-ELECTRONIC (Ref # 21175)	21175-1665	1
CONTROL UNIT-ELECTRONIC (Ref # 21175A)	21175-1666	1
SENSOR,WATER TEMP (Ref # 21176)	21176-0009	1
SENSOR,VEHICLE-DOWN (Ref # 21176A)	21176-0026	1
SENSOR,OXYGEN (Ref # 21176B)	21176-0993	1
SENSOR,SPEED SENSOR (Ref # 21176C)	21176-0996	1
RING-O,9.5X1.9 (Ref # 92055)	92055-0016	1
BOLT,FLANGED,5X12 (Ref # 92151)	92151-1305	1
COLLAR (Ref # 92152)	92152-1592	4
DAMPER,8X16X8.6 (Ref # 92161)	92161-0685	4
DAMPER,ECU (Ref # 92161A)	92161-2358	1
CLAMP (Ref # 92173)	92173-2462	1
NUT,FLANGED,5MM (Ref # 92210)	92210-0007	2
BOLT-SOCKET,5X25 (Ref # 120)	120CA0525	2
BOLT-FLANGED,5X18 (Ref # 130)	130BB0518	2

© 2025 Kawasaki Motors Corp., U.S.A.