2023 Versys-X 300 ABS

PARTS DIAGRAM

Taillight(s)

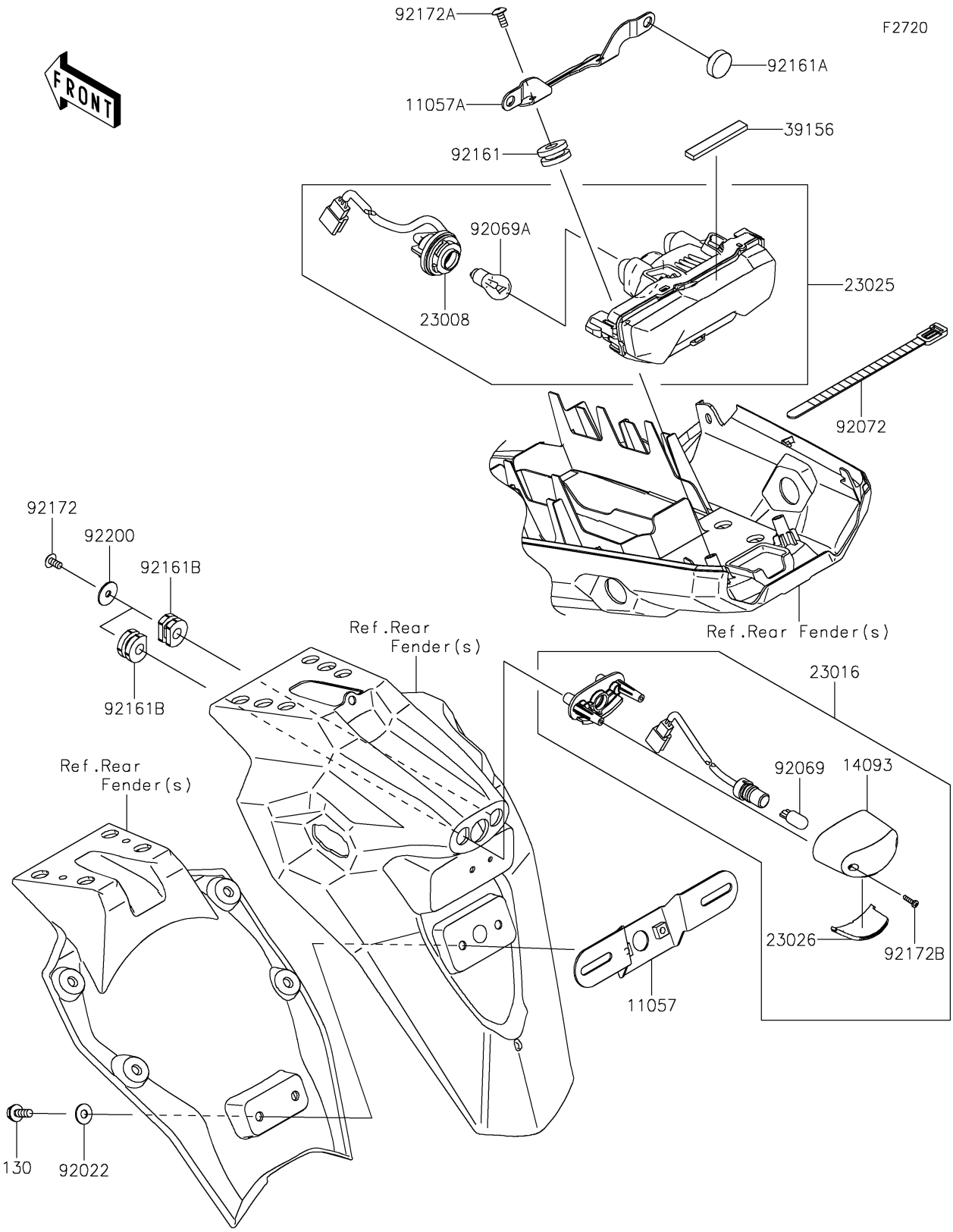

© 2026 Kawasaki Motors Corp., U.S.A.

2023 Versys-X 300 ABS

PARTS LIST

Taillight(s)

ITEM NAME	PART NUMBER	QUANTITY
BRACKET,LICENSE PLATE (Ref # 11057)	11057-1046	1
BRACKET (Ref # 11057A)	11057-1351	1
COVER,LICENSE LAMP (Ref # 14093)	14093-0525	1
SOCKET-ASSY (Ref # 23008)	23008-0182	1
LAMP-ASSY,LICENSE (Ref # 23016)	23016-0600	1
LAMP-TAIL (Ref # 23025)	23025-0378	1
LENS,LICENSE LAMP (Ref # 23026)	23026-0025	1
PAD,9X60X4 (Ref # 39156)	39156-0820	1
WASHER,6.5X16X1.0 (Ref # 92022)	92022-1093	2
BULB,12V 5W (Ref # 92069)	92069-1016	1
BULB,12V 21/5W (Ref # 92069A)	92069-1084	1
BAND,L=140 (Ref # 92072)	92072-1293	1
DAMPER (Ref # 92161)	92161-0163	2
DAMPER (Ref # 92161A)	92161-0336	2
DAMPER (Ref # 92161B)	92161-0776	2
SCREW,TAPPING,5X16 (Ref # 92172)	92172-0427	2
SCREW,5X12 (Ref # 92172A)	92172-0821	2
SCREW,4X12 (Ref # 92172B)	92172-0904	2
WASHER,5.5X20X1.2 (Ref # 92200)	92200-0284	2
BOLT-FLANGED,6X16 (Ref # 130)	130BA0616	2

© 2026 Kawasaki Motors Corp., U.S.A.