2018 TERYX4™ LE CAMO

PARTS DIAGRAM

Steering Wheel

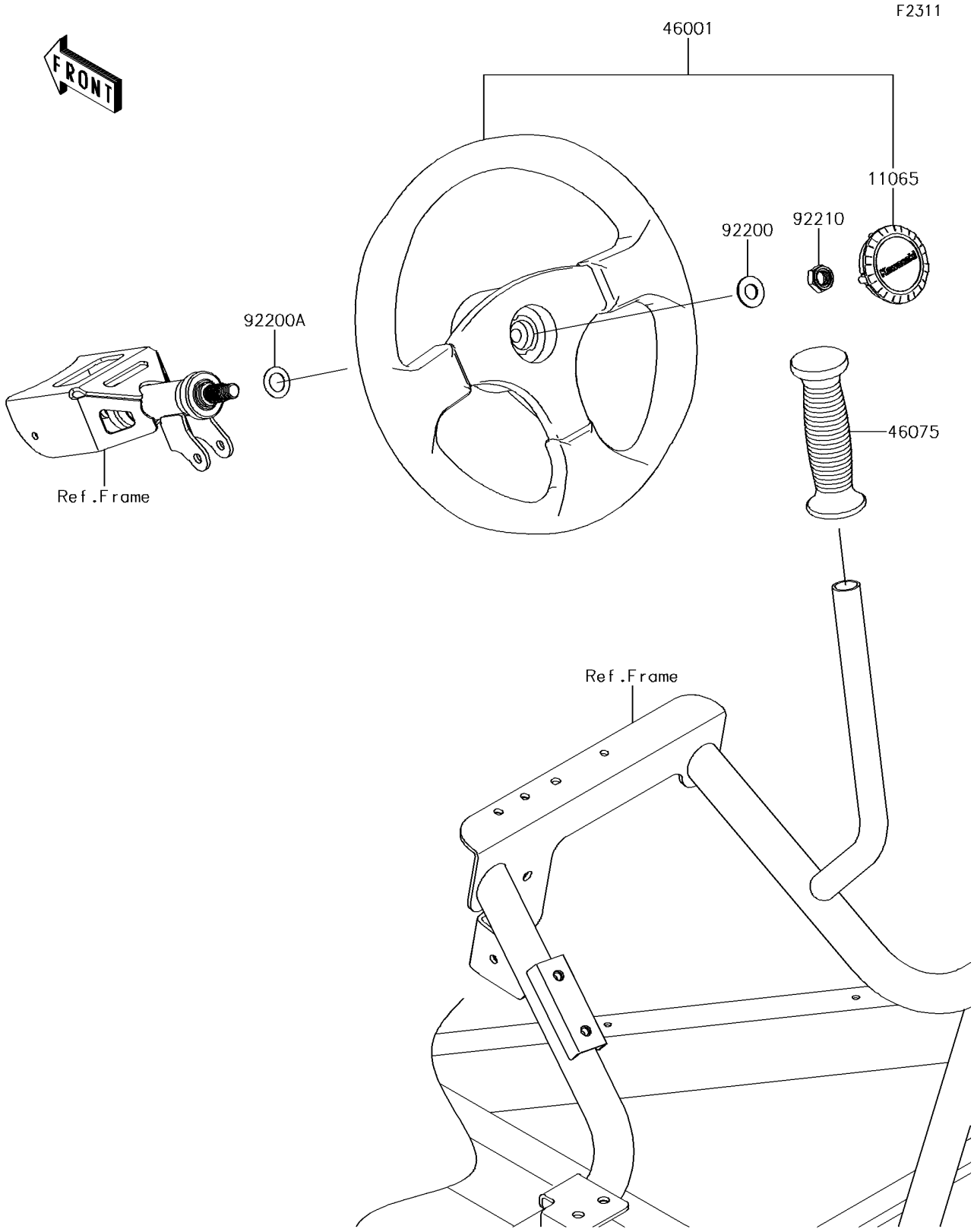

© 2026 Kawasaki Motors Corp., U.S.A.

2018 TERYX4™ LE CAMO

PARTS LIST

Steering Wheel

ITEM NAME	PART NUMBER	QUANTITY
CAP,HANDLE (Ref # 11065)	11065-0171	1
HANDLE-ASSY (Ref # 46001)	46001-0005	1
GRIP (Ref # 46075)	46075-0582	1
WASHER,12.1X25X1.6 (Ref # 92200)	92200-0455	1
WASHER,15X25X1.6 (Ref # 92200A)	92200-0460	1
NUT,LOCK,12MM (Ref # 92210)	92210-1249	1

© 2026 Kawasaki Motors Corp., U.S.A.