# 2018 TERYX4™ LE

## PARTS DIAGRAM

### Frame Fittings(Front)

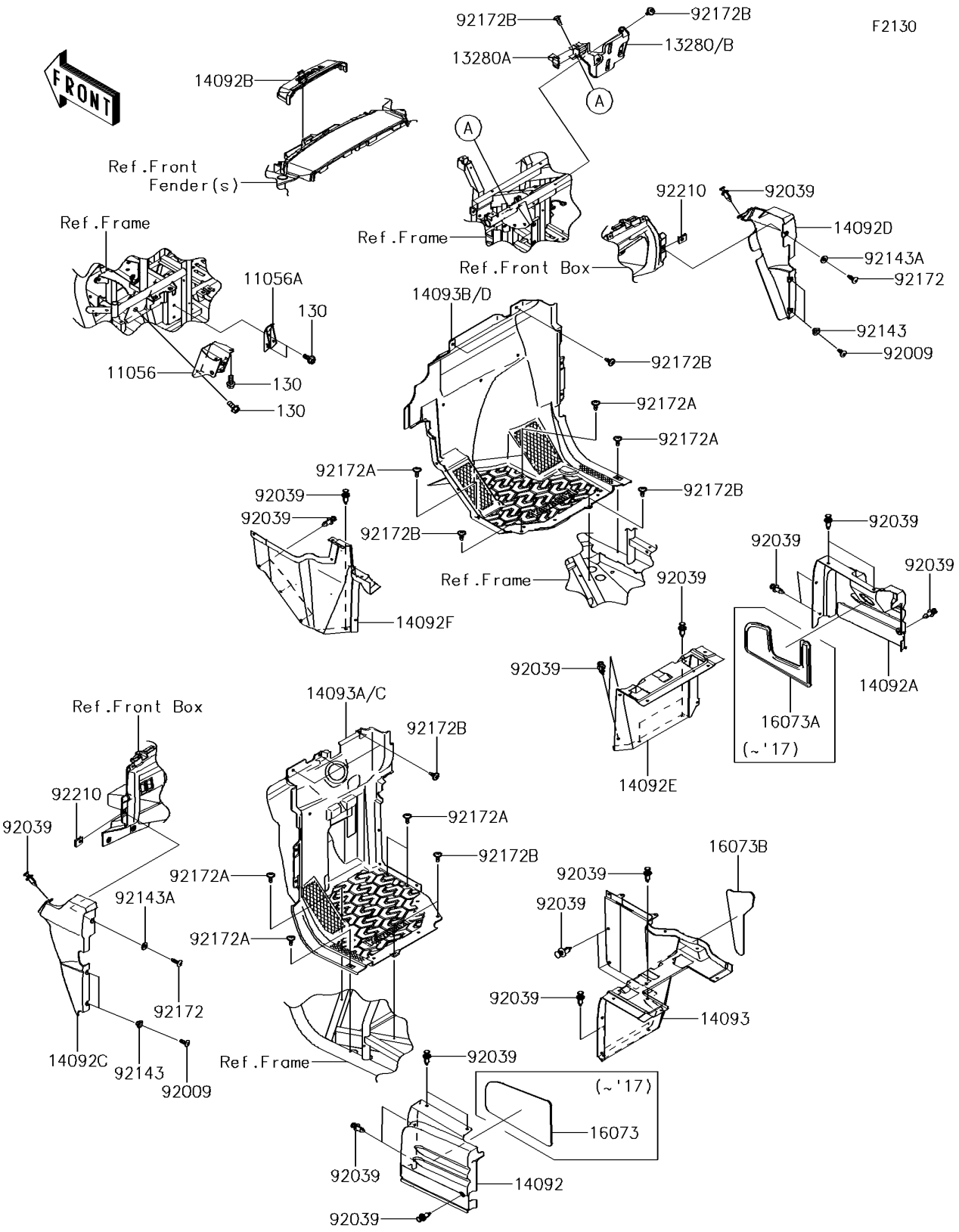


© 2026 Kawasaki Motors Corp., U.S.A.

# 2018 TERYX4™ LE

## PARTS LIST

### Frame Fittings(Front)

Kawasaki
Let the Good Times Roll®

| ITEM NAME | PART NUMBER | QUANTITY |
|---|---|---|
| BRACKET,BRAKE PEDAL (Ref # 11056) | 11056-1431 | 1 |
| BRACKET,THROTTLE PEDAL (Ref # 11056A) | 11056-4408 | 1 |
| HOLDER (Ref # 13280A) | 13280-0851 | 1 |
| HOLDER,ECU (Ref # 13280B) | 13280-0868 | 1 |
| COVER,SEAT SIDE,LH (Ref # 14092) | 14092-0720 | 1 |
| COVER,SEAT SIDE,RH (Ref # 14092A) | 14092-0721 | 1 |
| COVER,FUSE BOX (Ref # 14092B) | 14092-0724 | 1 |
| COVER,SIDE GUARD,LH,S.BLACK (Ref # 14092C) | 14092-0754-839 | 1 |
| COVER,SIDE GUARD,RH,S.BLACK (Ref # 14092D) | 14092-0755-839 | 1 |
| COVER,FR SEAT,RH (Ref # 14092E) | 14092-0757 | 1 |
| COVER,FR SEAT,RH,CNT (Ref # 14092F) | 14092-1083 | 1 |
| COVER,FR SEAT,LH (Ref # 14093) | 14093-0209 | 1 |
| COVER,FR FLOOR,LH (Ref # 14093A) | 14093-0550 | 1 |
| COVER,FR FLOOR,RH (Ref # 14093B) | 14093-0551 | 1 |
| COVER,FR FLOOR,LH (Ref # 14093C) | 14093-5137 | 1 |
| COVER,FR FLOOR,RH (Ref # 14093D) | 14093-5138 | 1 |
| INSULATOR,SEAT SIDE,LH (Ref # 16073) | 16073-0810 | 1 |
| INSULATOR,SEAT SIDE,RH (Ref # 16073A) | 16073-0811 | 1 |
| INSULATOR (Ref # 16073B) | 16073-0847 | 1 |
| SCREW,TAPPING,6X16 (Ref # 92009) | 92009-1166 | 4 |
| RIVET (Ref # 92039) | 92039-0776 | 26 |
| COLLAR (Ref # 92143) | 92143-1057 | 4 |
| COLLAR (Ref # 92143A) | 92143-1087 | 2 |
| SCREW,TAPPING,6X20 (Ref # 92172) | 92172-0488 | 2 |
| SCREW,6X16 (Ref # 92172A) | 92172-0711 | 8 |
| SCREW,6X16 (Ref # 92172B) | 92172-0826 | 11 |
| NUT,LEAF SPRING,6MM (Ref # 92210) | 92210-0624 | 2 |
| BOLT-FLANGED,8X18 (Ref # 130) | 130BA0818 | 5 |

© 2026 Kawasaki Motors Corp., U.S.A.