2018 TERYX4™ LE

PARTS DIAGRAM

Ignition System

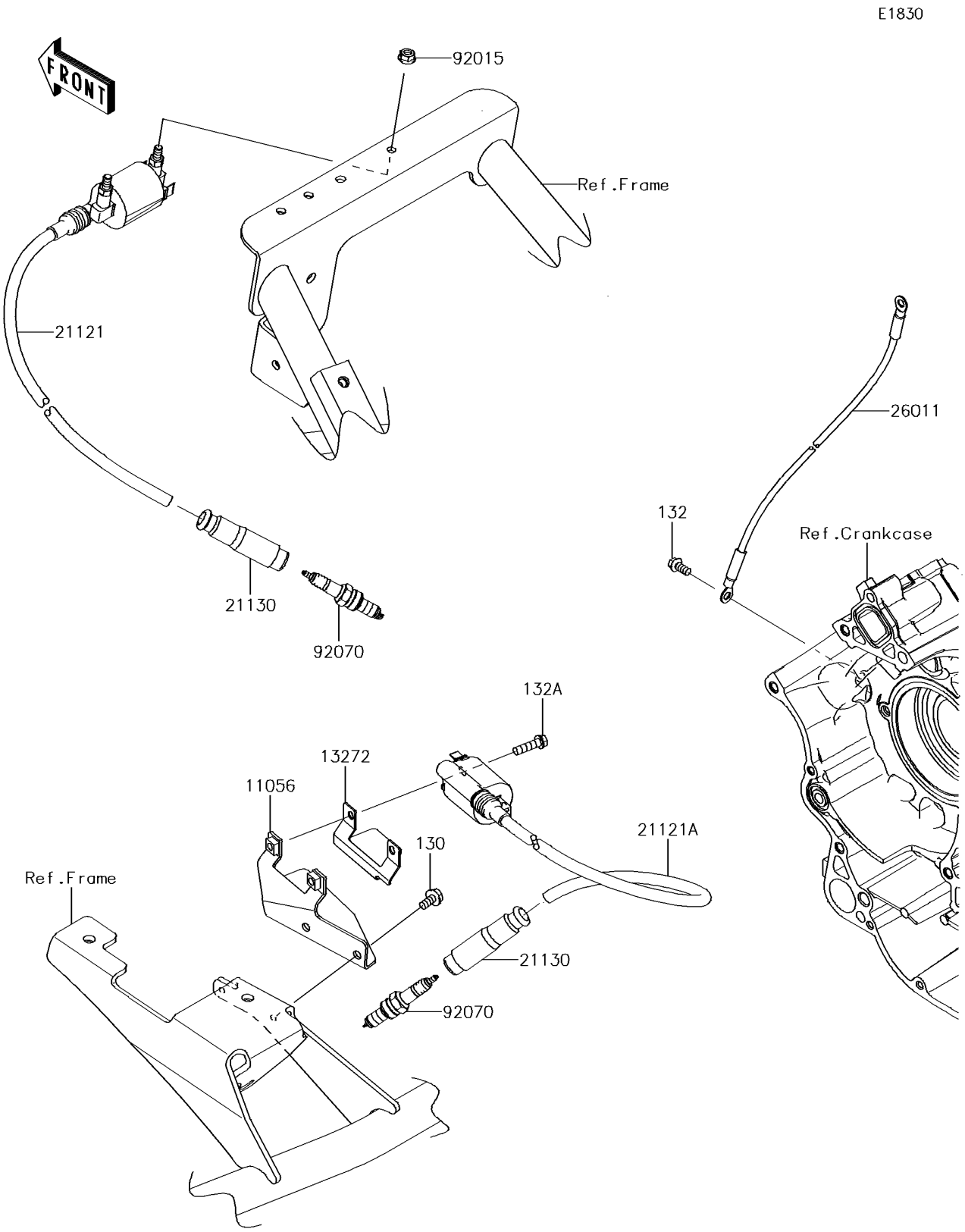

© 2026 Kawasaki Motors Corp., U.S.A.

2018 TERYX4™ LE

PARTS LIST

Ignition System

ITEM NAME	PART NUMBER	QUANTITY
BRACKET (Ref # 11056)	11056-2673	1
PLATE (Ref # 13272)	13272-1541	1
COIL-IGNITION (Ref # 21121)	21121-0716	1
COIL-IGNITION (Ref # 21121A)	21121-0717	1
CAP-SPARK PLUG (Ref # 21130)	21130-1071	2
WIRE-LEAD (Ref # 26011)	26011-0712	1
NUT,FLANGED,6MM (Ref # 92015)	92015-1367	2
PLUG-SPARK,CPR7EA-9(NGK) (Ref # 92070)	92070-0022	2
BOLT-FLANGED,6X12 (Ref # 130)	130BA0612	2
BOLT-FLANGED-SMALL,6X12 (Ref # 132)	132BA0612	1
BOLT-FLANGED-SMALL,6X22 (Ref # 132A)	132BA0622	2

© 2026 Kawasaki Motors Corp., U.S.A.