2018 TERYX4™ LE

PARTS DIAGRAM

Crankcase

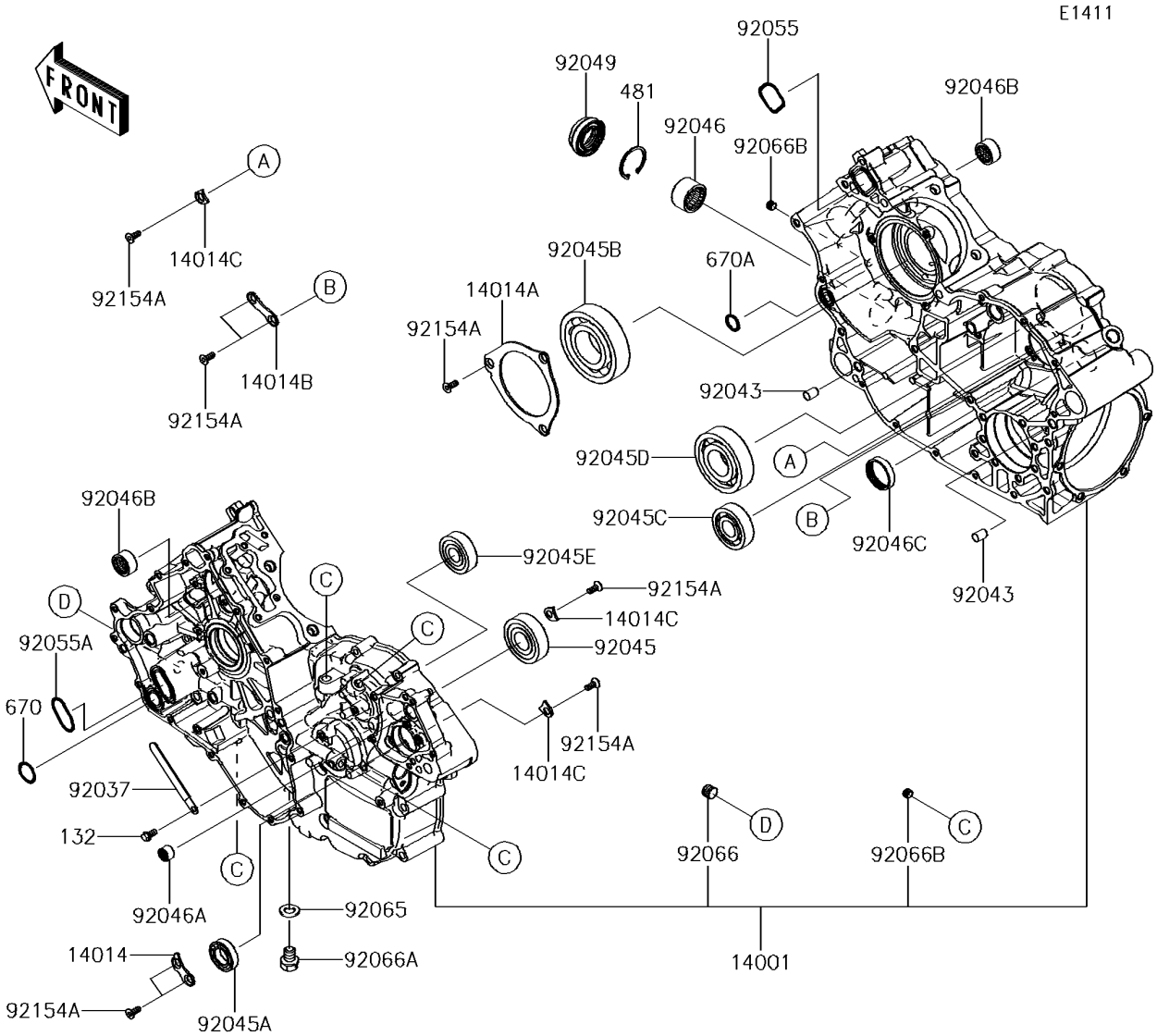

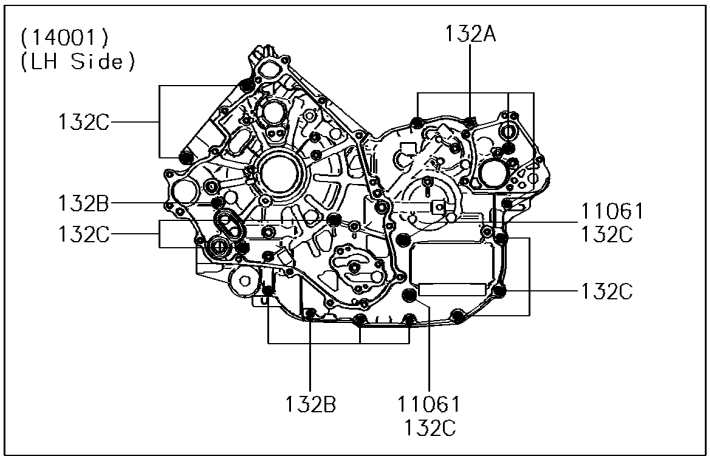

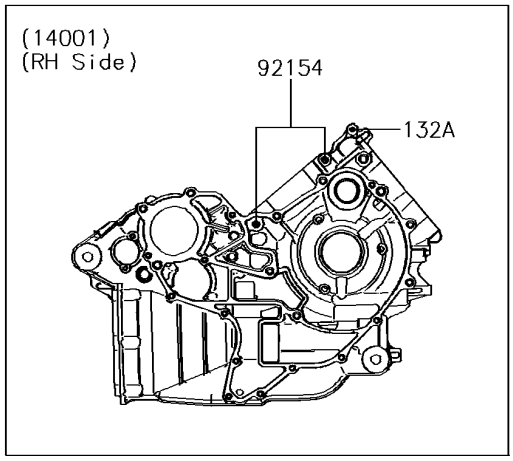

© 2026 Kawasaki Motors Corp., U.S.A.

2018 TERYX4™ LE

PARTS LIST

Crankcase

ITEM NAME	PART NUMBER	QUANTITY
GASKET,8.2X15 (Ref # 11061)	11061-0727	2
SET-CRANKCASE (Ref # 14001)	14001-0655	1
PLATE-POSITION (Ref # 14014)	14014-0553	1
PLATE-POSITION (Ref # 14014A)	14014-0554	1
PLATE-POSITION (Ref # 14014B)	14014-0555	1
PLATE-POSITION (Ref # 14014C)	14014-0557	3
CLAMP (Ref # 92037)	92037-1993	1
PIN,10X14 (Ref # 92043)	92043-1506	2
BEARING-BALL,63/22LUA (Ref # 92045)	92045-0704	1
BEARING-BALL,6904 (Ref # 92045A)	92045-0705	1
BEARING-BALL,6308YA3-T2C3 (Ref # 92045B)	92045-0706	1
BEARING-BALL,TMB304LUA (Ref # 92045C)	92045-0743	1
BEARING-BALL,63/32C3 (Ref # 92045D)	92045-1364	1
BEARING-BALL,6303LUA (Ref # 92045E)	92045-1389	1
BEARING-NEEDLE (Ref # 92046)	92046-0022	1
BEARING-NEEDLE,HK1210FM (Ref # 92046A)	92046-0034	1
BEARING-NEEDLE,BA13178ZE01 (Ref # 92046B)	92046-0048	2
BEARING-NEEDLE,7E-HKS33X38X8 (Ref # 92046C)	92046-1221	1
SEAL-OIL,25X45X9.5 (Ref # 92049)	92049-0739	1
RING-O,33X2.6 (Ref # 92055)	92055-0723	1
RING-O,31.2X2.4 (Ref # 92055A)	92055-0724	1
GASKET,12X22X2 (Ref # 92065)	92065-097	1
PLUG,BREATHER (Ref # 92066)	92066-1035	1
PLUG,OIL DRAIN,12X15 (Ref # 92066A)	92066-1174	1
PLUG,PT1/8X7 (Ref # 92066B)	92066-1227	5
BOLT,FLANGED,8X95 (Ref # 92154)	92154-0835	2
BOLT,TORX,6X11.7 (Ref # 92154A)	92154-1821	10
BOLT-FLANGED-SMALL,6X12 (Ref # 132)	132BA0612	1
BOLT-FLANGED-SMALL,6X40 (Ref # 132A)	132BD0640	5

© 2026 Kawasaki Motors Corp., U.S.A.

2018 TERYX4™ LE

PARTS LIST

Crankcase

ITEM NAME	PART NUMBER	QUANTITY
BOLT-FLANGED-SMALL,6X55 (Ref # 132B)	132BD0655	5
BOLT-FLANGED-SMALL,8X75 (Ref # 132C)	132BD0875	9
CIRCLIP-TYPE-C,37MM (Ref # 481)	481J3700	1
O RING,22MM (Ref # 670)	670B2022	1
O RING,16MM (Ref # 670A)	670D2016	1

© 2026 Kawasaki Motors Corp., U.S.A.