1996 Ninja® ZX™-9R PARTS DIAGRAM

Crankshaft

E1321

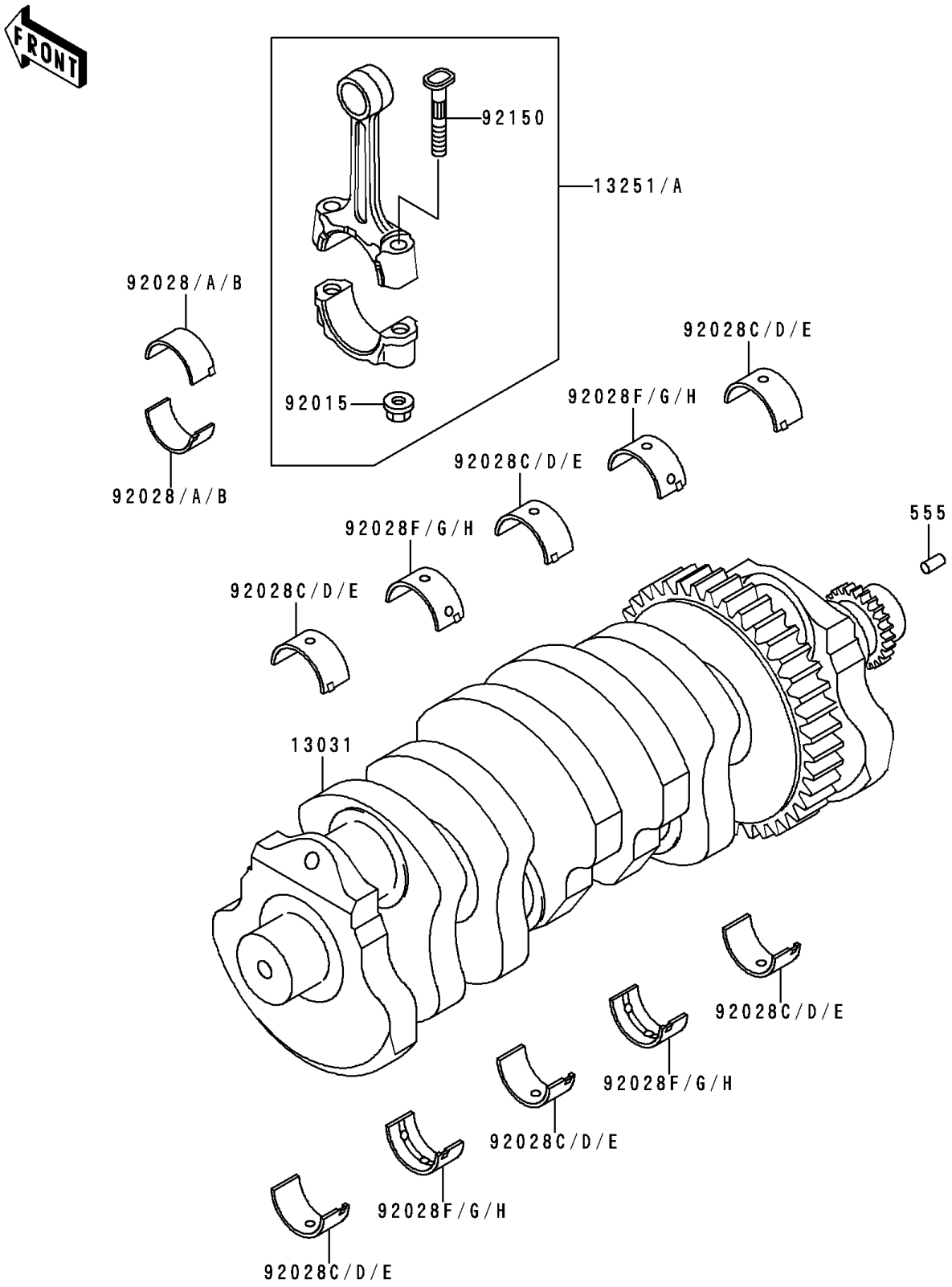

© 2024 Kawasaki Motors Corp., U.S.A.

1996 Ninja® ZX™-9R PARTS LIST

Crankshaft

ITEM NAME	PART NUMBER	QUANTITY
PIN-SPRING,4X8 (Ref # 555)	555A0408	1
CRANKSHAFT-COMP (Ref # 13031)	13031-1374	1
ROD-ASSY-CONNECTING,I (Ref # 13251)	13251-1105-II	4
ROD-ASSY-CONNECTING,J (Ref # 13251A)	13251-1105-JJ	4
NUT,FLANGED,8MM (Ref # 92015)	92015-1311	8
BUSHING,CONNECTING ROD,BLUE (Ref # 92028)	92028-1712	8
BUSHING,CONNECTING ROD (Ref # 92028A)	92028-1713	AR
BUSHING,CONNECTING ROD,BROWN (Ref # 92028B)	92028-1714	AR
BUSHING,CRANK,#1,#3,#5,BLUE (Ref # 92028C)	92028-1715	6
BUSHING,CRANK,#1,#3,#5 (Ref # 92028D)	92028-1716	AR
BUSHING,CRANK,#1,#3,#5,BROWN (Ref # 92028E)	92028-1717	AR
BUSHING,CRANKSHAFT,#2,#4,BLUE (Ref # 92028F)	92028-1718	4
BUSHING,CRANKSHAFT,#2,#4 (Ref # 92028G)	92028-1719	AR
BUSHING,CRANKSHAFT,#2,#4,BROWN (Ref # 92028H)	92028-1720	AR
BOLT,CONNECTING ROD,8MM (Ref # 92150)	92150-1216	8

© 2024 Kawasaki Motors Corp., U.S.A.