2025 Teryx4 S Camo PARTS DIAGRAM

Front Fender(s)

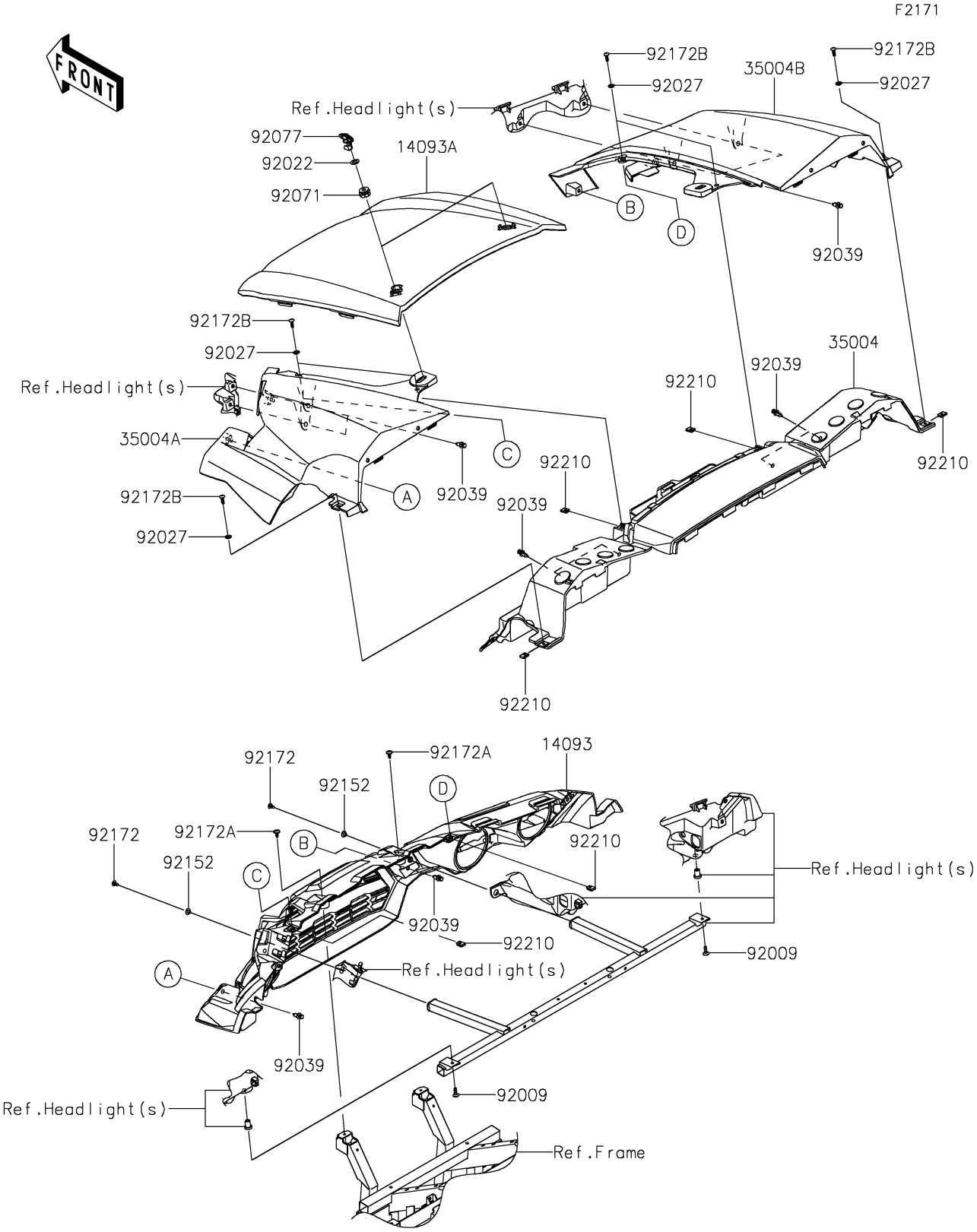

© 2026 Kawasaki Motors Corp., U.S.A.

2025 Teryx4 S Camo PARTS LIST

Front Fender(s)

ITEM NAME	PART NUMBER	QUANTITY
COVER,FR GRILL (Ref # 14093)	14093-0202	1
COVER,HOOD,CAMOUFLAGE (Ref # 14093A)	14093-0211-72X	1
FENDER-FRONT,RR (Ref # 35004)	35004-0345	1
FENDER-FRONT,LH,CAMOUFLAGE (Ref # 35004A)	35004-0346-72X	1
FENDER-FRONT,RH,CAMOUFLAGE (Ref # 35004B)	35004-0347-72X	1
SCREW,6X20 (Ref # 92009)	92009-1289	2
WASHER,12.5X22X1.2 (Ref # 92022)	92022-072	2
COLLAR (Ref # 92027)	92027-4020	6
RIVET (Ref # 92039)	92039-0776	12
GROMMET (Ref # 92071)	92071-0746	2
KNOB (Ref # 92077)	92077-0033	2
COLLAR,6.3X8.3X7.2 (Ref # 92152)	92152-1865	2
SCREW,TAPPING,6X16 (Ref # 92172)	92172-0739	2
SCREW,6X16 (Ref # 92172A)	92172-0826	2
SCREW,TAPPING,6X20 (Ref # 92172B)	92172-0883	6
NUT,LEAF SPRING,6MM (Ref # 92210)	92210-0624	6

© 2026 Kawasaki Motors Corp., U.S.A.