2024 Teryx4™ S LE PARTS DIAGRAM

Guard(s)

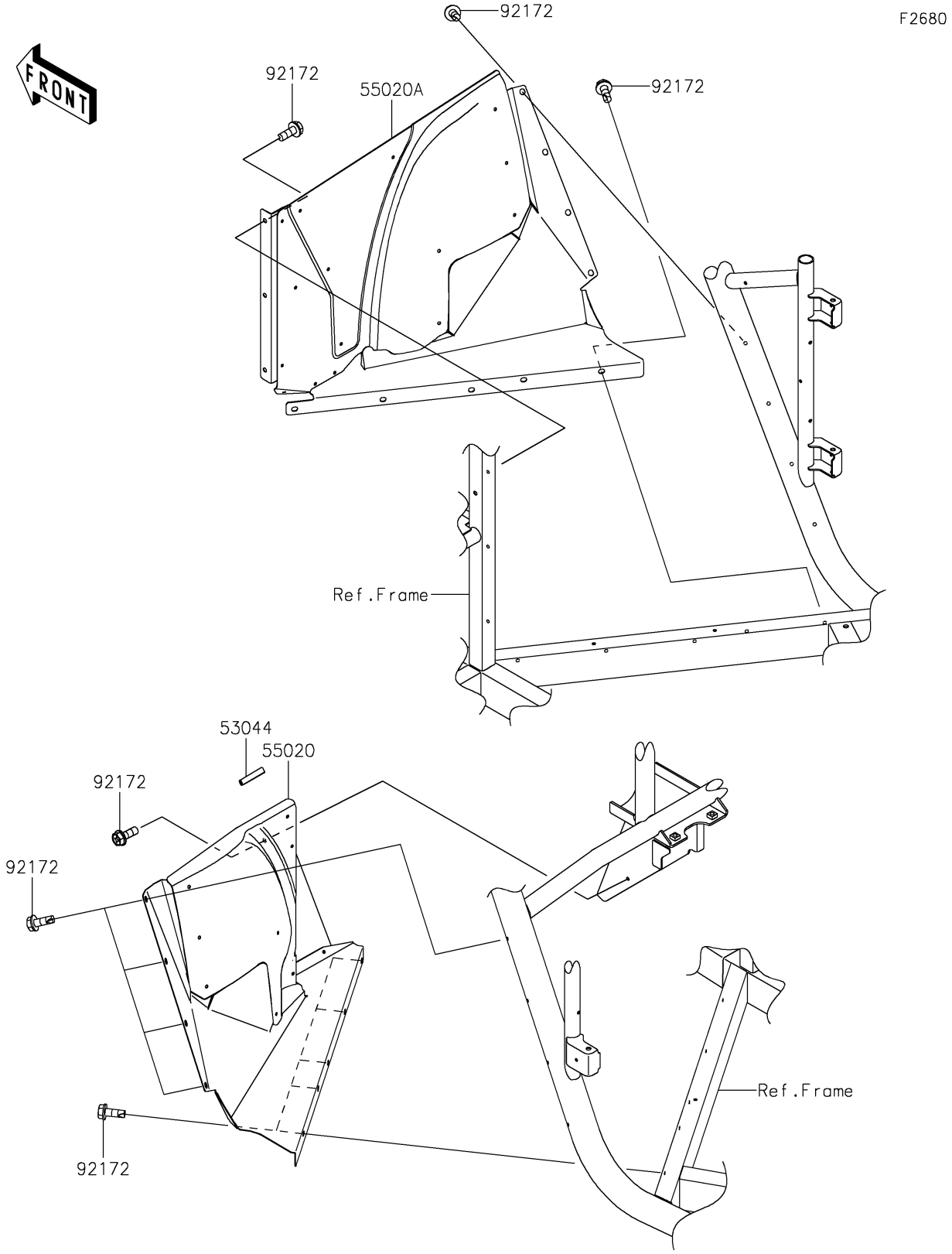

© 2025 Kawasaki Motors Corp., U.S.A.

2024 Teryx4™ S LE PARTS LIST

Guard(s)

ITEM NAME	PART NUMBER	QUANTITY
TRIM,L=50 (Ref # 53044)	53044-0699	1
GUARD,1PIECE,LH (Ref # 55020)	55020-2167	1
GUARD,1PIECE,RH (Ref # 55020A)	55020-2168	1
SCREW,TAPPING,6X16 (Ref # 92172)	92172-1388	22

© 2025 Kawasaki Motors Corp., U.S.A.