2000 Ninja® ZX™-7R PARTS DIAGRAM

Owner's Tools

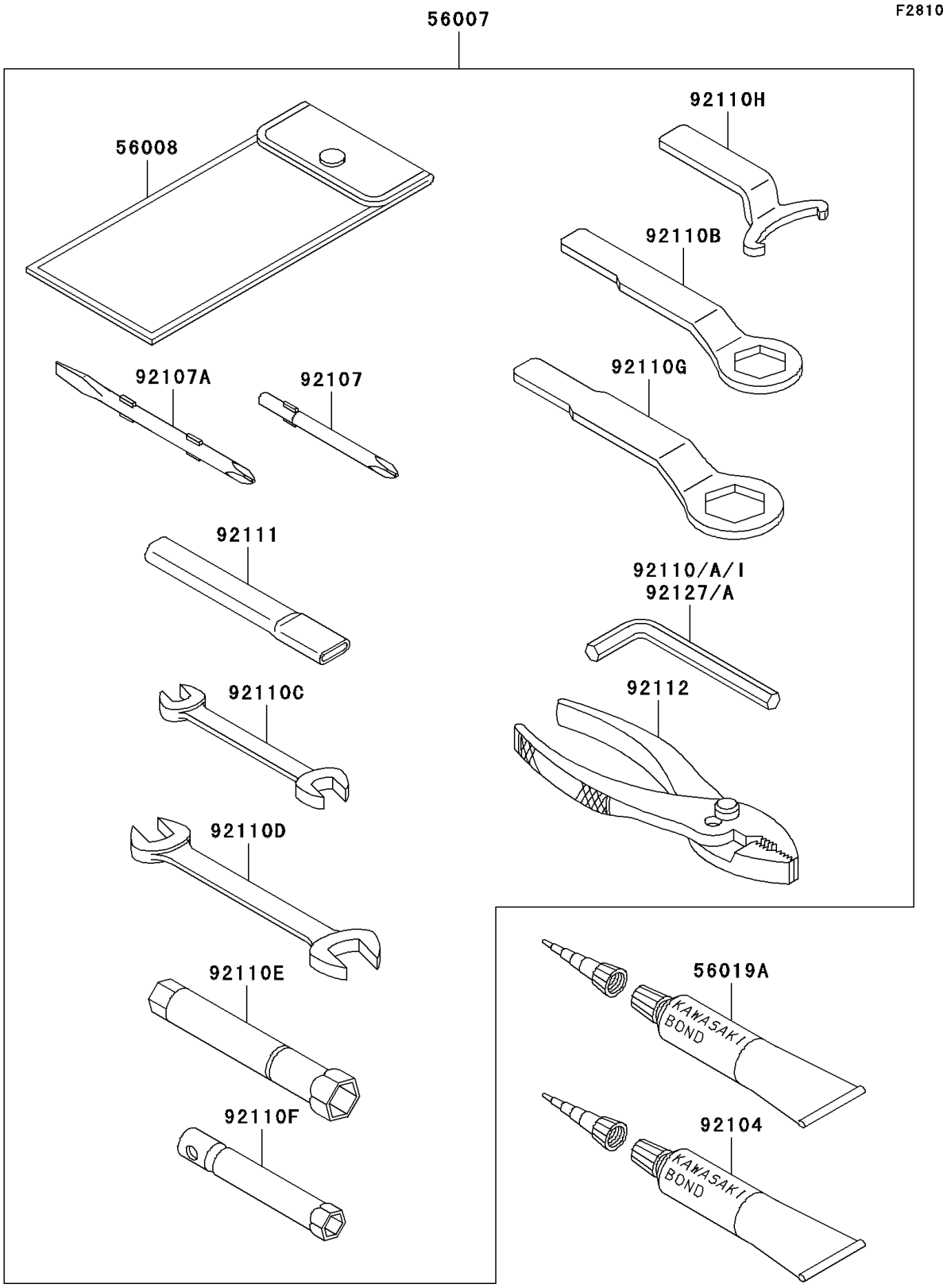

© 2024 Kawasaki Motors Corp., U.S.A.

2000 Ninja® ZX™-7R PARTS LIST

Owner's Tools

ITEM NAME	PART NUMBER	QUANTITY
TOOL-KIT (Ref # 56007)	56007-1400	1
BAG,TOOL (Ref # 56008)	56008-006	1
THREE BOND TB1211,HT/RS,WHITE (Ref # 56019A)	56019-120	1
GASKET-LIQUID,TUBE,100G,BLACK (Ref # 92104)	92104-1003	1
TOOL-DRIVER,#3PHILLIPS (Ref # 92107)	92107-005	1
TOOL-DRIVER,#2PHILLIPS&SLOT (Ref # 92107A)	92107-1051	1
TOOL-WRENCH,ALLEN,5MM (Ref # 92110)	92110-1015	1
TOOL-WRENCH,ALLEN,3MM (Ref # 92110A)	92110-1140	1
TOOL-WRENCH,BOX END,27MM (Ref # 92110B)	92110-1147	1
TOOL-WRENCH,OPEN END,10X12 (Ref # 92110C)	92110-1152	1
TOOL-WRENCH,OPEN END,14X17 (Ref # 92110D)	92110-1153	1
TOOL-WRENCH,BOX,16MM (Ref # 92110E)	92110-1154	1
TOOL-WRENCH,BOX,10MM (Ref # 92110F)	92110-1156	1
TOOL-WRENCH,BOX END,32MM (Ref # 92110G)	92110-1161	1
TOOL-WRENCH,LEVER (Ref # 92110H)	92110-1184	1
TOOL-WRENCH,ALLEN,4MM (Ref # 92110I)	92110-3703	1
TOOL-BAR,BOX END WRENCH (Ref # 92111)	92111-1052	1
TOOL-PLIERS (Ref # 92112)	92112-1001	1
TOOL-WRENCH,ALLEN,8MM (Ref # 92127)	92127-002	1
TOOL-WRENCH,ALLEN,6MM (Ref # 92127A)	92127-003	1

© 2024 Kawasaki Motors Corp., U.S.A.