2002 Ninja® ZX™-7R PARTS DIAGRAM

Ignition Switch/Locks/Reflectors

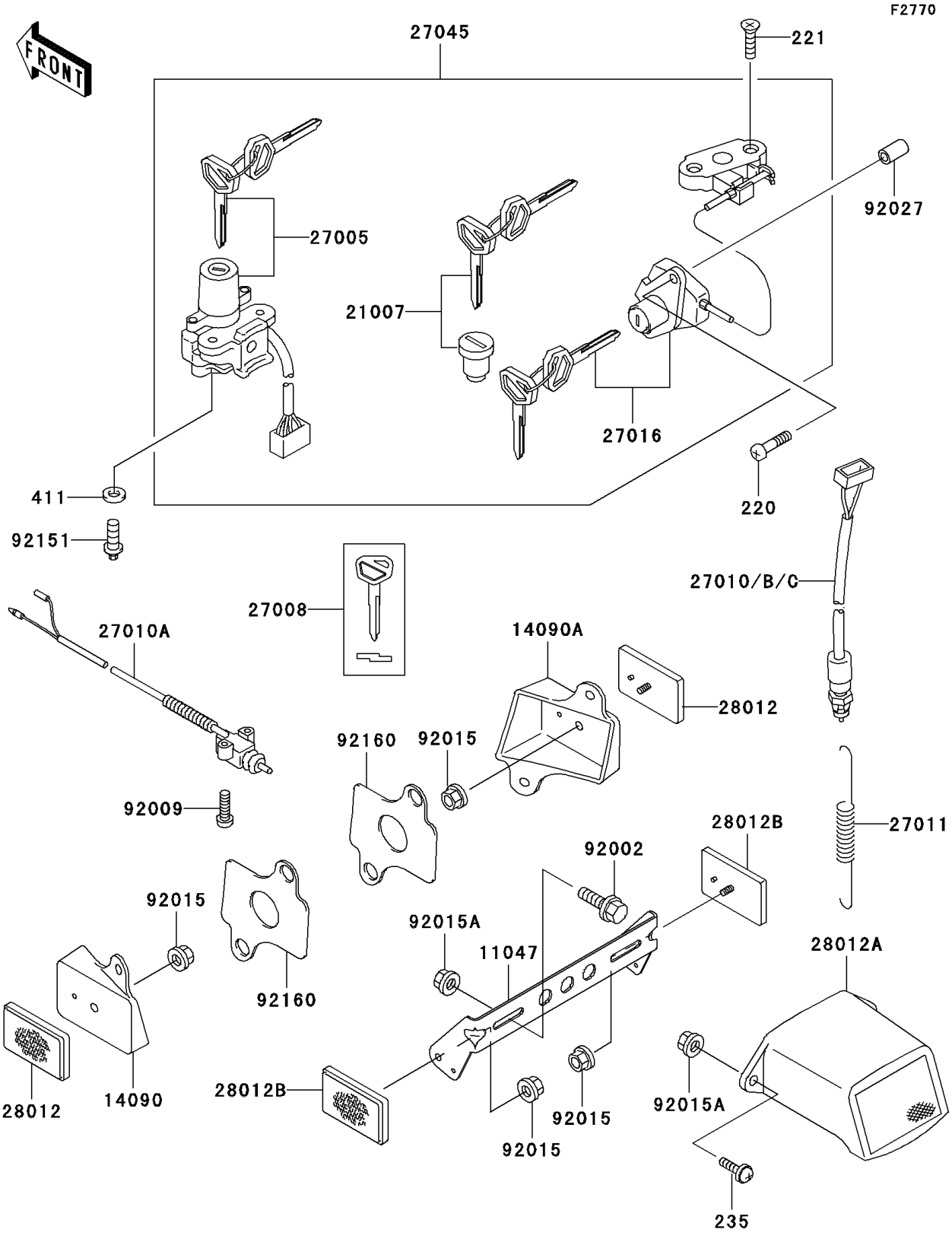

© 2024 Kawasaki Motors Corp., U.S.A.

2002 Ninja® ZX™-7R PARTS LIST

Ignition Switch/Locks/Reflectors

ITEM NAME	PART NUMBER	QUANTITY
SCREW-PAN-CROSS (Ref # 220)	220C0630	2
SCREW-CSK-CROS,6X20 (Ref # 221)	221B0620	2
SCREW-PAN-WP-CROS (Ref # 235)	235C0620	2
WASHER-PLAIN,6MM (Ref # 411)	411E0600	2
BRACKET,REFLECTOR (Ref # 11047)	11047-1470	1
COVER,REFLECTOR,FR,LH (Ref # 14090)	14090-1377	1
COVER,REFLECTOR,FR,RH (Ref # 14090A)	14090-1378	1
ROTOR,LOCK,TANK CAP (Ref # 21007)	21007-5035	1
SWITCH-ASSY-IGNITION (Ref # 27005)	27005-1199	1
KEY-LOCK,BLANK (Ref # 27008)	27008-1170	1
SWITCH,SIDE STAND (Ref # 27010A)	27010-1222	1
SWITCH,REAR BRAKE (Ref # 27010B)	27010-1432	1
SPRING,BRAKE LAMP SWITCH (Ref # 27011)	27011-011	1
LOCK-ASSY,SEAT (Ref # 27016)	27016-5219	1
SWITCH-ASSY (Ref # 27045)	27045-5020	1
REFLECTOR-REFLEX (Ref # 28012)	28012-1003	2
REFLECTOR-REFLEX,RR (Ref # 28012A)	28012-1066	1
REFLECTOR-REFLEX (Ref # 28012B)	28012-1088	2
BOLT,6X12 (Ref # 92002)	92002-1132	2
SCREW,5X20 (Ref # 92009)	92009-1459	2
NUT,FLANGED,5MM (Ref # 92015)	92015-1259	4
NUT,FLANGED,6MM (Ref # 92015A)	92015-1367	4
COLLAR,6.8X10X12 (Ref # 92027)	92027-162	2
BOLT,TORX,6X16 (Ref # 92151)	92151-1911	2
DAMPER,REFLECTOR (Ref # 92160)	92160-1486	2

© 2024 Kawasaki Motors Corp., U.S.A.