# 2000 Ninja® ZX™-7R PARTS DIAGRAM

## Rear Brake

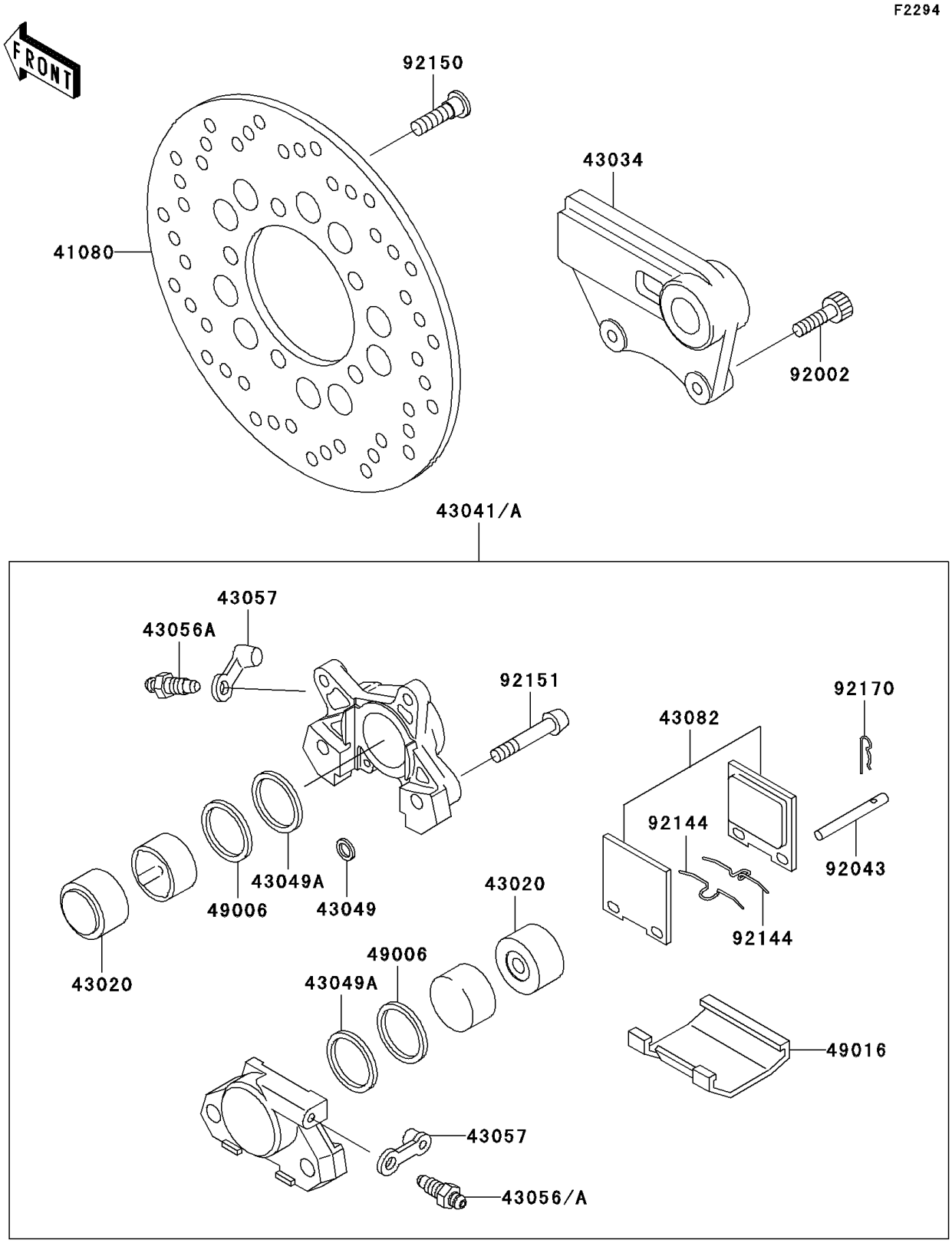


© 2024 Kawasaki Motors Corp., U.S.A.

# 2000 Ninja® ZX™-7R PARTS LIST

## Rear Brake

| ITEM NAME | PART NUMBER | QUANTITY |
|---|---|---|
| DISC,RR,C.GRAY (Ref # 41080) | 41080-1242-FB | 1 |
| PISTON-COMP-BRAKE (Ref # 43020) | 43020-1111 | 2 |
| HOLDER-BRAKE,REAR CALIPER (Ref # 43034) | 43034-1137 | 1 |
| CALIPER-ASSY,RR (Ref # 43041) | 43041-1591 | 1 |
| PACKING,SEAL,6.5X11.5X2.2 (Ref # 43049) | 43049-1004 | 1 |
| PACKING,PISTON SEAL (Ref # 43049A) | 43049-1097 | 2 |
| BREATHER-BRAKE (Ref # 43056) | 43056-003 | 1 |
| BREATHER-BRAKE (Ref # 43056A) | 43056-1054 | 1 |
| CAP-BREATHER (Ref # 43057) | 43057-003 | 2 |
| PAD-ASSY-BRAKE (Ref # 43082) | 43082-1180 | 1 |
| BOOT,PISTON SEAL (Ref # 49006) | 49006-1212 | 2 |
| COVER-SEAL (Ref # 49016) | 49016-1145 | 1 |
| BOLT,SOCKET,8X25 (Ref # 92002) | 92002-1442 | 2 |
| PIN (Ref # 92043) | 92043-1522 | 2 |
| SPRING,PAD (Ref # 92144) | 92144-1401 | 2 |
| BOLT,SOCKET,8X30 (Ref # 92150) | 92150-1771 | 5 |
| BOLT,SOCKET,10X45 (Ref # 92151) | 92151-1106 | 2 |
| CLAMP (Ref # 92170) | 92170-1635 | 1 |

© 2024 Kawasaki Motors Corp., U.S.A.