2000 Ninja® ZX™-7R PARTS DIAGRAM

Frame Fittings

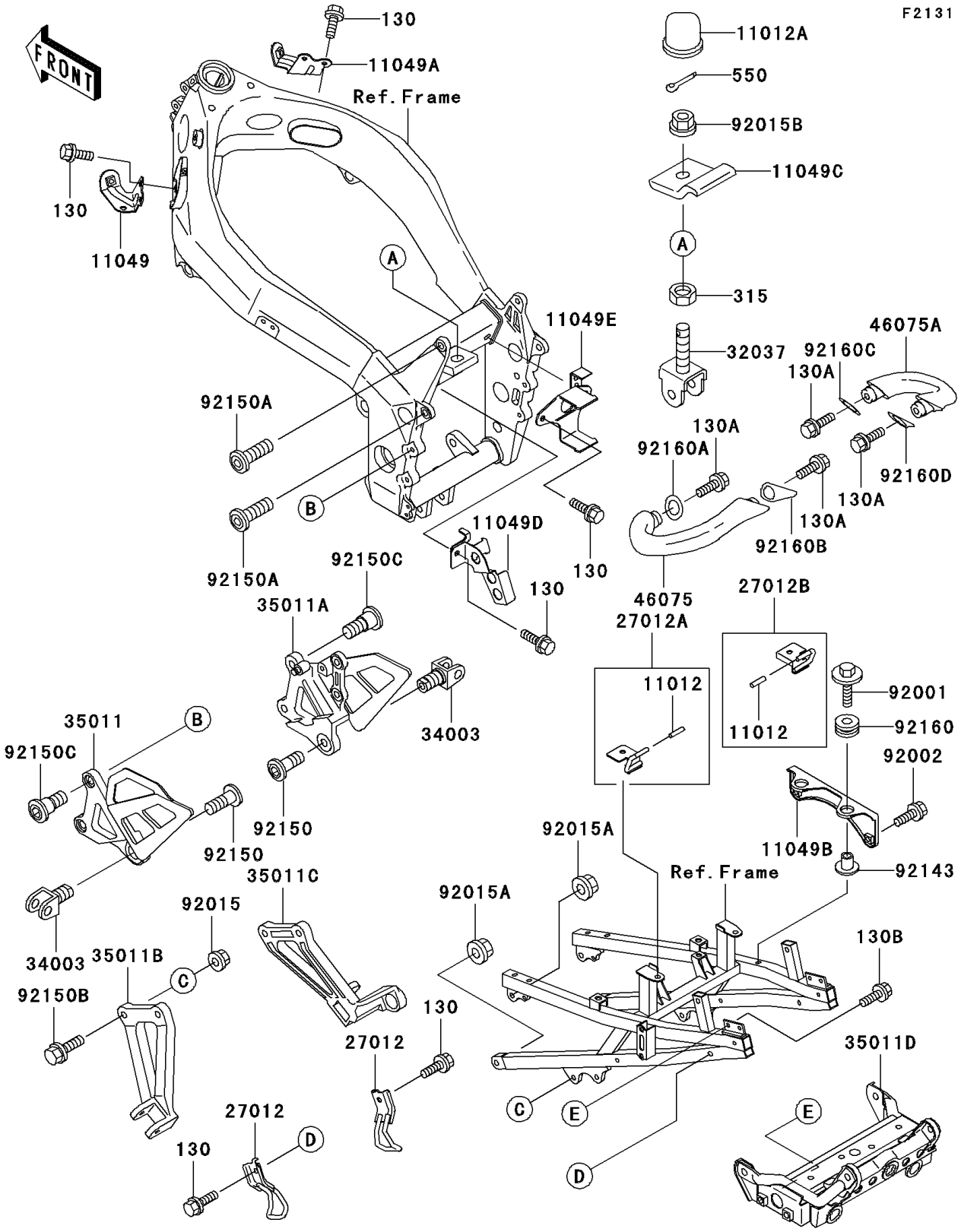

© 2024 Kawasaki Motors Corp., U.S.A.

2000 Ninja® ZX™-7R PARTS LIST

Frame Fittings

ITEM NAME	PART NUMBER	QUANTITY
BOLT-FLANGED,6X16,BLACK (Ref # 130)	130J0616	9
BOLT-FLANGED,8X16,BLACK (Ref # 130A)	130J0816	4
BOLT-FLANGED,8X20 (Ref # 130B)	130J0820	4
NUT-HEX-FINE,16MM (Ref # 315)	315B1600	1
PIN-COTTER,4.0X25 (Ref # 550)	550D4025	1
CAP,BUNGEE CORD HOOK (Ref # 11012)	11012-1589	2
CAP (Ref # 11012A)	11012-1844	1
BRACKET,RADIATOR,LH (Ref # 11049)	11049-1335	1
BRACKET,RADIATOR,RH (Ref # 11049A)	11049-1336	1
BRACKET,IGNITER (Ref # 11049B)	11049-1397	1
BRACKET,BATTERY CASE,FR (Ref # 11049C)	11049-1398	1
BRACKET,FUEL FILTER (Ref # 11049D)	11049-1701	1
BRACKET,FUEL PUMP (Ref # 11049E)	11049-1736	1
HOOK,BUNGEE CORD,RR (Ref # 27012)	27012-1475	2
HOOK,HELMET,LH (Ref # 27012A)	27012-1535	1
HOOK,HELMET,RH (Ref # 27012B)	27012-1536	1
BRACKET-SHOCKABSORBER (Ref # 32037)	32037-1564	1
HOLDER-STEP (Ref # 34003)	34003-1327	2
STAY,FR,LH (Ref # 35011)	35011-1552	1
STAY,FR,RH (Ref # 35011A)	35011-1553	1
STAY,RR,LH (Ref # 35011B)	35011-1554	1
STAY,RR,RH (Ref # 35011C)	35011-1555	1
STAY,TAIL,C.GRAY (Ref # 35011D)	35011-1783-EZ	1
GRIP,RR,LH,F.BLACK (Ref # 46075)	46075-1124-21	1
GRIP,RR,RH,F.BLACK (Ref # 46075A)	46075-1125-21	1
BOLT,6X30 (Ref # 92001)	92001-1776	2
BOLT,6X14 (Ref # 92002)	92002-1656	2
NUT,FLANGED,8MM (Ref # 92015)	92015-1406	4
NUT,FLANGED,10MM (Ref # 92015A)	92015-1415	4

© 2024 Kawasaki Motors Corp., U.S.A.

2000 Ninja® ZX™-7R PARTS LIST

Frame Fittings

ITEM NAME	PART NUMBER	QUANTITY
NUT,FLANGED,16MM (Ref # 92015B)	92015-1881	1
COLLAR (Ref # 92143)	92143-1353	2
BOLT,SOCKET,10X25 (Ref # 92150)	92150-1268	2
BOLT,10X35 (Ref # 92150A)	92150-1295	4
BOLT,FLANGED,8X30 (Ref # 92150B)	92150-1455	4
BOLT,SOCKET,8X20 (Ref # 92150C)	92150-1839	4
DAMPER (Ref # 92160)	92160-1162	2
DAMPER,REAR GRIP,LH,FR (Ref # 92160A)	92160-1732	1
DAMPER,REAR GRIP,LH,RR (Ref # 92160B)	92160-1733	1
DAMPER,REAR GRIP,RH,FR (Ref # 92160C)	92160-1756	1
DAMPER,REAR GRIP,RH,RR (Ref # 92160D)	92160-1757	1

© 2024 Kawasaki Motors Corp., U.S.A.