1997 Ninja® ZX™-7RR PARTS DIAGRAM

Oil Pump/Oil Filter

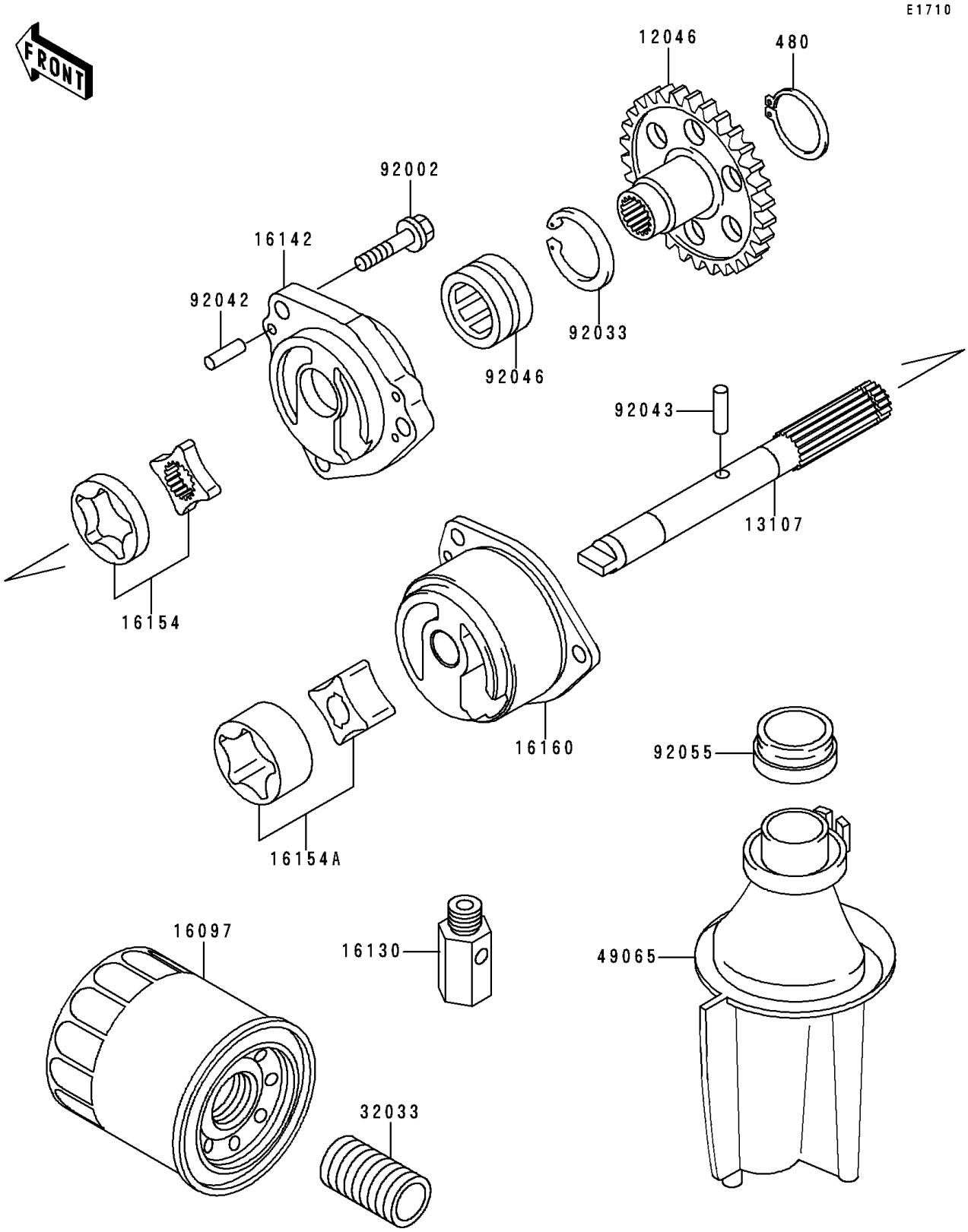

© 2025 Kawasaki Motors Corp., U.S.A.

1997 Ninja® ZX™-7RR PARTS LIST

Oil Pump/Oil Filter

ITEM NAME	PART NUMBER	QUANTITY
CIRCLIP-TYPE-C,15MM (Ref # 480)	480J1500	1
SPROCKET,OIL PUMP,30T (Ref # 12046)	12046-1123	1
SHAFT,PUMP (Ref # 13107)	13107-1339	1
FILTER-ASSY-OIL (Ref # 16097)	16097-1063	1
VALVE-ASSY-RELIEF (Ref # 16130)	16130-1058	2
COVER-PUMP (Ref # 16142)	16142-1110	1
ROTOR-PUMP (Ref # 16154)	16154-1090	1
ROTOR-PUMP (Ref # 16154A)	16154-1107	1
BODY,OIL PUMP (Ref # 16160)	16160-1229	1
PIPE,OIL FILTER (Ref # 32033)	32033-1535	1
FILTER-OIL (Ref # 49065)	49065-1074	1
BOLT,6X25 (Ref # 92002)	92002-1582	3
RING-SNAP (Ref # 92033)	92033-1277	1
PIN,DOWEL,4X15.8 (Ref # 92042)	92042-014	1
PIN,17.9X5.0 (Ref # 92043)	92043-1444	1
BEARING-NEEDLE,RNA4903 (Ref # 92046)	92046-1109	1
RING-O,OIL FILTER (Ref # 92055)	92055-1503	1

© 2025 Kawasaki Motors Corp., U.S.A.