# 1996 Ninja® ZX™-7RR PARTS DIAGRAM

## Crankcase

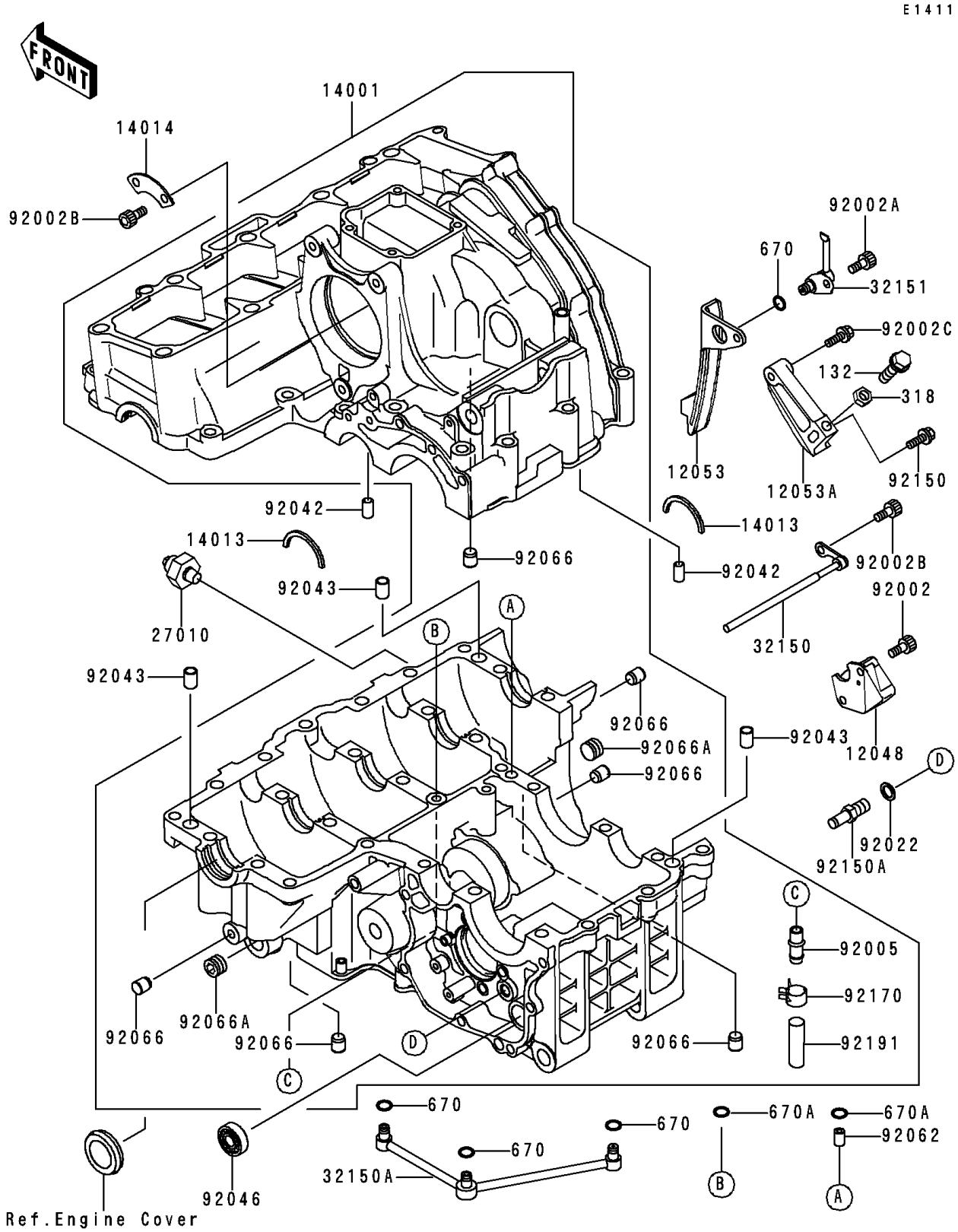


© 2025 Kawasaki Motors Corp., U.S.A.

# 1996 Ninja® ZX™-7RR PARTS LIST

## Crankcase

| ITEM NAME | PART NUMBER | QUANTITY |
|---|---|---|
| BOLT-FLANGED-SMALL (Ref # 132) | 132G0820 | 1 |
| NUT-HEX-SMALL,8MM (Ref # 318) | 318B0800 | 1 |
| O RING (Ref # 670) | 670D1505 | 4 |
| O RING,8MM (Ref # 670A) | 670D1508 | 2 |
| TENSIONER-ASSY (Ref # 12048) | 12048-1109 | 1 |
| GUIDE-CHAIN (Ref # 12053) | 12053-1281 | 1 |
| GUIDE-CHAIN (Ref # 12053A) | 12053-1285 | 1 |
| SET-CRANKCASE (Ref # 14001) | 14001-1208 | 1 |
| RING-POSITION,T=1.98 (Ref # 14013) | 14013-1004 | 2 |
| PLATE-POSITION (Ref # 14014) | 14014-1056 | 1 |
| SWITCH,OIL PRESSURE (Ref # 27010) | 27010-1313 | 1 |
| PIPE (Ref # 32150) | 32150-1795 | 1 |
| PIPE (Ref # 32150A) | 32150-1796 | 1 |
| PIPE (Ref # 32151) | 32151-1492 | 1 |
| BOLT,SOCKET,6X25 (Ref # 92002) | 92002-1696 | 2 |
| BOLT,SOCKET,6X16 (Ref # 92002A) | 92002-1778 | 1 |
| BOLT,SOCKET,6X12 (Ref # 92002B) | 92002-1796 | 3 |
| BOLT,6X30 (Ref # 92002C) | 92002-1797 | 1 |
| FITTING,BREATHER PIPE (Ref # 92005) | 92005-1161 | 1 |
| WASHER,10X15X1.0 (Ref # 92022) | 92022-1973 | 1 |
| PIN,DOWEL,6X16 (Ref # 92042) | 92042-016 | 2 |
| PIN,DOWEL,10X14 (Ref # 92043) | 92043-1037 | 3 |
| BEARING-NEEDLE,HK1312 (Ref # 92046) | 92046-1148 | 1 |
| NOZZLE (Ref # 92062) | 92062-1074 | 1 |
| PLUG,OIL LINE,7.2X8 (Ref # 92066) | 92066-1012 | 6 |
| PLUG (Ref # 92066A) | 92066-1262 | 2 |
| BOLT,6X25 (Ref # 92150) | 92150-1799 | 1 |
| BOLT,RETURN SPRING (Ref # 92150A) | 92150-1803 | 1 |
| CLAMP (Ref # 92170) | 92170-1167 | 1 |

© 2025 Kawasaki Motors Corp., U.S.A.

# 1996 Ninja® ZX™-7RR PARTS LIST

## Crankcase

| ITEM NAME | PART NUMBER | QUANTITY |
|---|---|---|
| TUBE (Ref # 92191) | 92191-1016 | 1 |

© 2025 Kawasaki Motors Corp., U.S.A.