1996 Ninja® ZX™-7RR PARTS DIAGRAM

Cylinder/Piston(s)

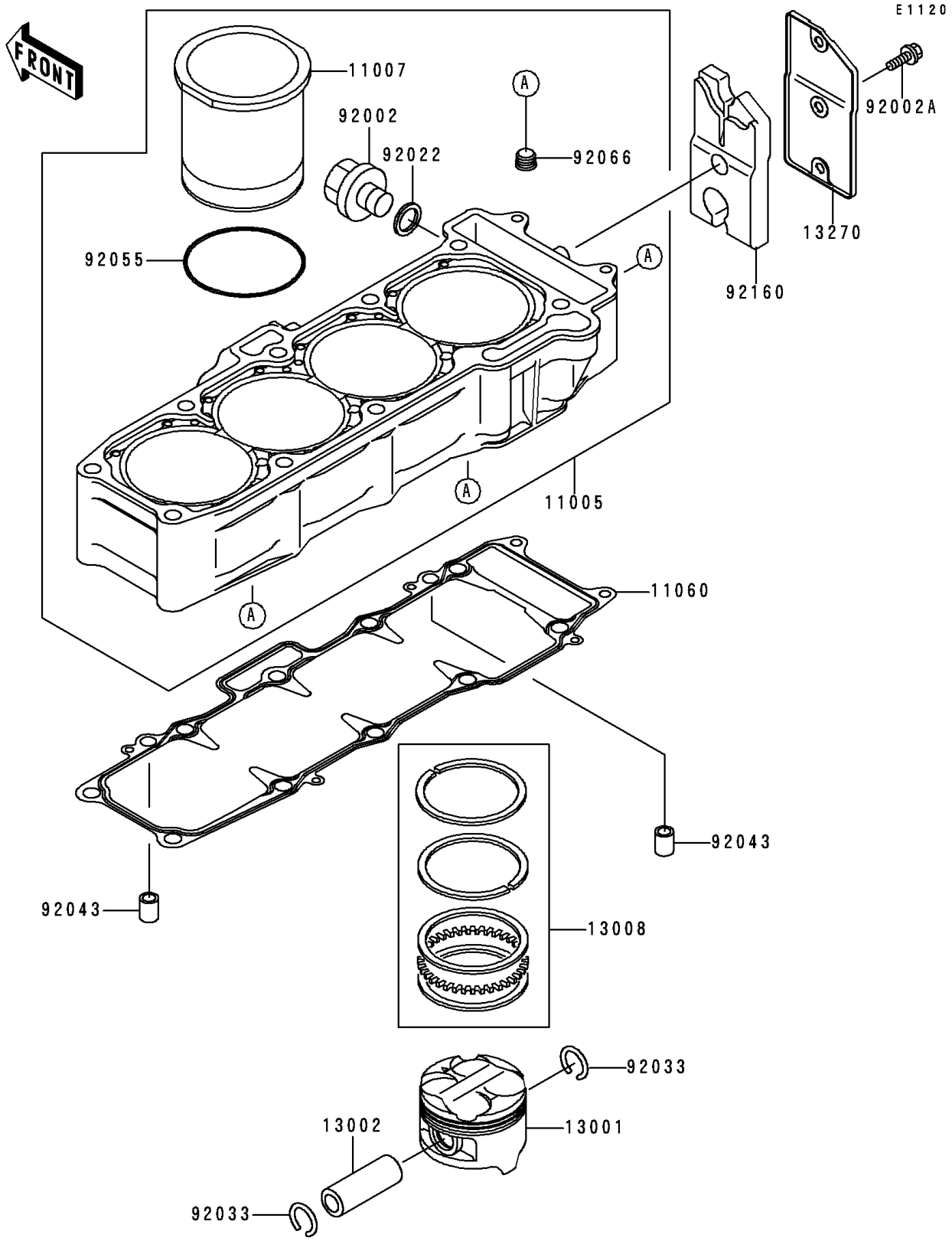

© 2025 Kawasaki Motors Corp., U.S.A.

1996 Ninja® ZX™-7RR PARTS LIST

Cylinder/Piston(s)

ITEM NAME	PART NUMBER	QUANTITY
CYLINDER-ENGINE (Ref # 11005)	11005-1837	1
LINER-CYLINDER (Ref # 11007)	11007-1139	4
GASKET,CYLINDER BASE,T=0.2 (Ref # 11060)	11060-1705	1
PISTON-ENGINE,STD (Ref # 13001)	13001-1447	4
PIN-PISTON (Ref # 13002)	13002-1086	4
RING-SET-PISTON,STD (Ref # 13008)	13008-1168	4
PLATE (Ref # 13270)	13270-1502	1
BOLT,16X10 (Ref # 92002)	92002-1238	1
BOLT,6X8 (Ref # 92002A)	92002-1604	3
WASHER,16XX22X1.0 (Ref # 92022)	92022-1812	1
RING-SNAP,20.5X1.2 (Ref # 92033)	92033-1099	8
PIN,DOWEL,10X14 (Ref # 92043)	92043-1037	2
RING-O,78.9X2.0 (Ref # 92055)	92055-1526	4
PLUG (Ref # 92066)	92066-1260	3
DAMPER (Ref # 92160)	92160-1813	1

© 2025 Kawasaki Motors Corp., U.S.A.