2026 Teryx KRX4 1000 PARTS DIAGRAM

Seat(Front)

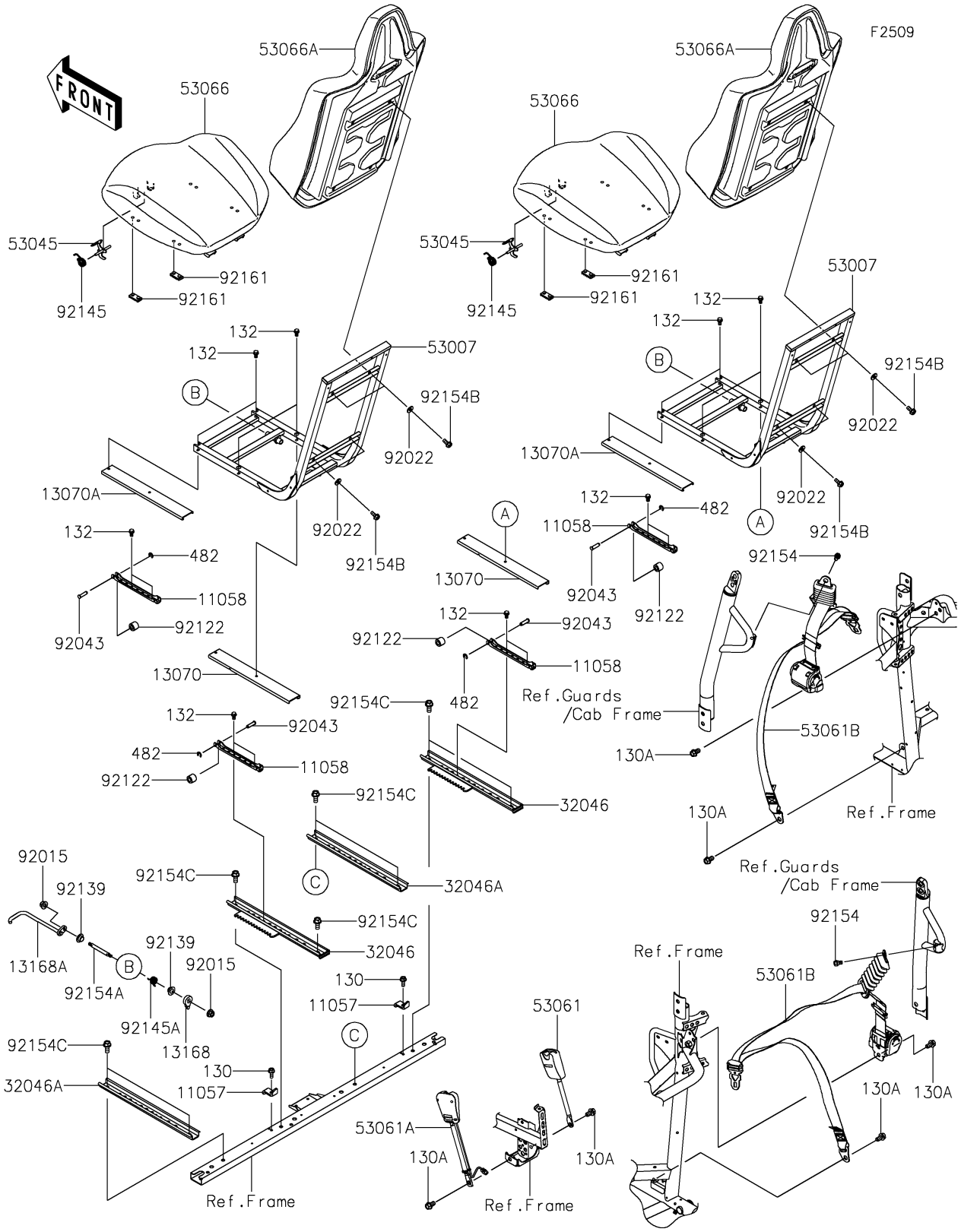

© 2026 Kawasaki Motors Corp., U.S.A.

2026 Teryx KRX4 1000 PARTS LIST

Seat(Front)

ITEM NAME	PART NUMBER	QUANTITY
BRACKET (Ref # 11057)	11057-2767	2
BRACKET (Ref # 11058)	11058-2959	4
GUIDE,SEAT,RH (Ref # 13070)	13070-1503	2
GUIDE,SEAT,LH (Ref # 13070A)	13070-1504	2
LEVER,STOP (Ref # 13168)	13168-0883	2
LEVER,SEAT ADJUST (Ref # 13168A)	13168-0884	2
BRACKET-SEAT,RAIL,RH (Ref # 32046)	32046-0507	2
BRACKET-SEAT,RAIL,LH (Ref # 32046A)	32046-0508	2
FRAME-SEAT (Ref # 53007)	53007-0498	2
HOOK-ASSY,SEAT BOTTOM (Ref # 53045)	53045-0039	2
BELT-SEAT,BUCKLE,PASSENGER (Ref # 53061)	53061-0358	1
BELT-SEAT,BUCKLE,DRIVER (Ref # 53061A)	53061-0365	1
BELT-SEAT,RETRACTOR (Ref # 53061B)	53061-0368	2
SEAT-ASSY,BOTTOM,BLACK+BLK (Ref # 53066)	53066-0975-71Q	2
SEAT-ASSY,BACK,SIL+BLK+SIL (Ref # 53066A)	53066-0977-64L	2
NUT,8MM (Ref # 92015)	92015-1432	4
WASHER,6.5X16X2 (Ref # 92022)	92022-1565	8
PIN (Ref # 92043)	92043-0991	8
ROLLER (Ref # 92122)	92122-0564	8
BUSHING (Ref # 92139)	92139-0230	4
SPRING,SEAT LATCH (Ref # 92145)	92145-0022	2
SPRING,ADJUST LEVER (Ref # 92145A)	92145-1858	2
BOLT,FLANGED,10X16 (Ref # 92154)	92154-2089	2
BOLT,ADJUST LEVER (Ref # 92154A)	92154-3923	2
BOLT,FLANGED,6X14 (Ref # 92154B)	92154-3968	8
BOLT,FLANGED,10X18 (Ref # 92154C)	92154-7022	8
DAMPER,SEAT (Ref # 92161)	92161-1489	8
BOLT-FLANGED,6X16 (Ref # 130)	130BA0616	2
BOLT-FLANGED,12X22 (Ref # 130A)	130BA1222	6

© 2026 Kawasaki Motors Corp., U.S.A.

2026 Teryx KRX4 1000 PARTS LIST

Seat(Front)

ITEM NAME	PART NUMBER	QUANTITY
BOLT-FLANGED-SMALL,6X10 (Ref # 132)	132BA0610	16
CIRCLIP-TYPE-E,4MM (Ref # 482)	482J4000	8

© 2026 Kawasaki Motors Corp., U.S.A.