2026 Teryx KRX4 1000 PARTS DIAGRAM

Control

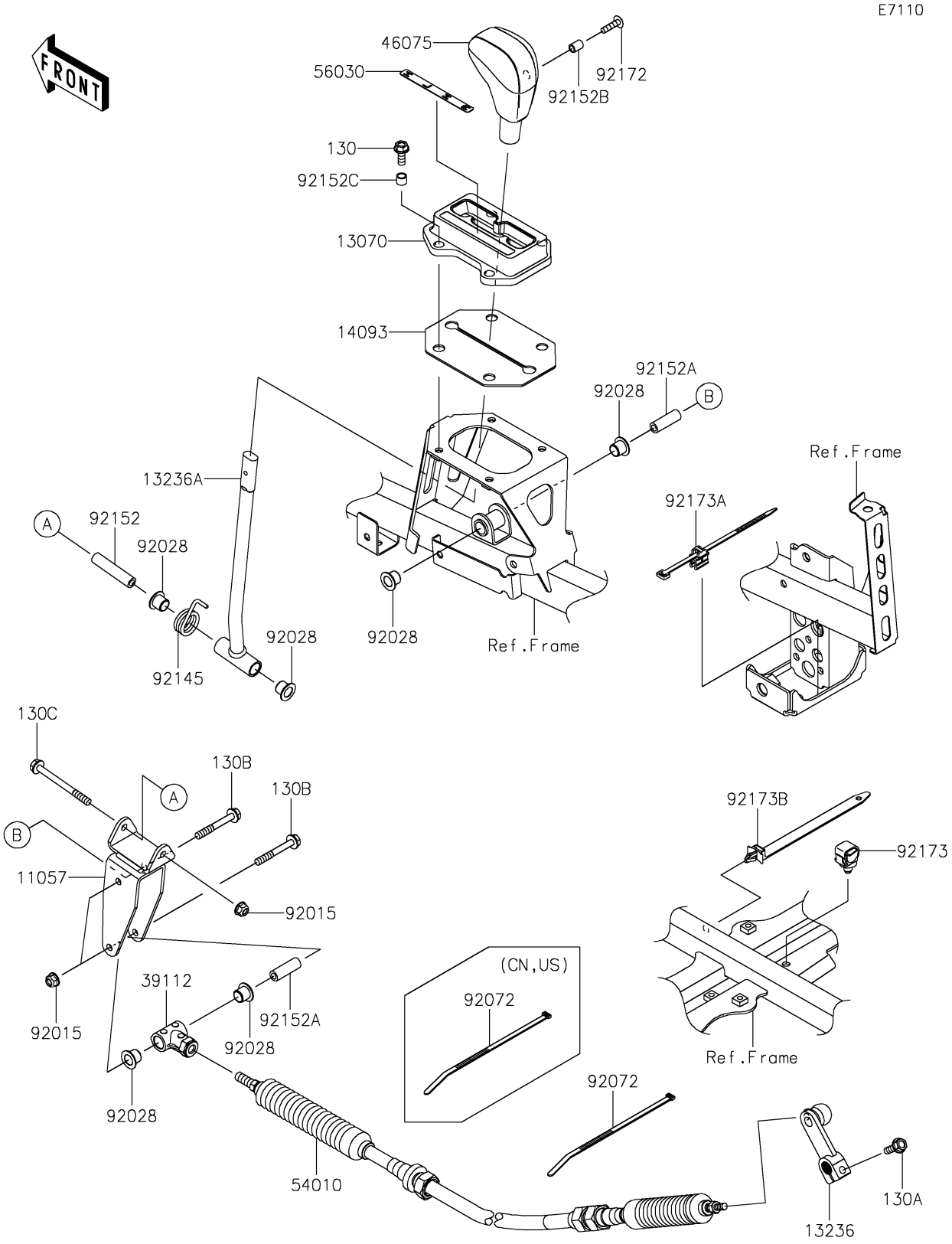

© 2026 Kawasaki Motors Corp., U.S.A.

2026 Teryx KRX4 1000 PARTS LIST

Control

ITEM NAME	PART NUMBER	QUANTITY
BRACKET,LEVER (Ref # 11057)	11057-7665	1
GUIDE (Ref # 13070)	13070-0894	1
LEVER-COMP,CHANGE LEVER (Ref # 13236)	13236-0708	1
LEVER-COMP (Ref # 13236A)	13236-0817	1
COVER,HEAT GUARD (Ref # 14093)	14093-1245	1
RODEND-TIE (Ref # 39112)	39112-0036	1
GRIP (Ref # 46075)	46075-0569	1
CABLE (Ref # 54010)	54010-0663	1
LABEL,POSITION (Ref # 56030)	56030-1421	1
NUT,LOCK,FLANGED,6MM (Ref # 92015)	92015-1675	3
BUSHING (Ref # 92028)	92028-1507	6
BAND,L=292.1 (Ref # 92072)	92072-3509	1
SPRING (Ref # 92145)	92145-1839	1
COLLAR,6.0X10X47 (Ref # 92152)	92152-1517	1
COLLAR,6.0X10X30 (Ref # 92152A)	92152-1518	2
COLLAR,5.6X8X10.5 (Ref # 92152B)	92152-1545	1
COLLAR,6.8X9.2X8.8 (Ref # 92152C)	92152-2863	4
SCREW,5X20 (Ref # 92172)	92172-2081	1
CLAMP,12MM DIA. (Ref # 92173)	92173-0736	1
CLAMP,W/EDGE CLIP,DIA.6-45 (Ref # 92173A)	92173-1827	1
CLAMP (Ref # 92173B)	92173-1980	1
BOLT-FLANGED,6X18 (Ref # 130)	130BB0618	4
BOLT-FLANGED,6X20 (Ref # 130A)	130CA0620	1
BOLT-FLANGED,6X45 (Ref # 130B)	130CA0645	2
BOLT-FLANGED,6X65 (Ref # 130C)	130CA0665	1
BAND,L=292.1 (Ref # 92072)	92072-3509	2

© 2026 Kawasaki Motors Corp., U.S.A.