2026 Teryx KRX4 1000 PARTS DIAGRAM

Crankshaft

E1321

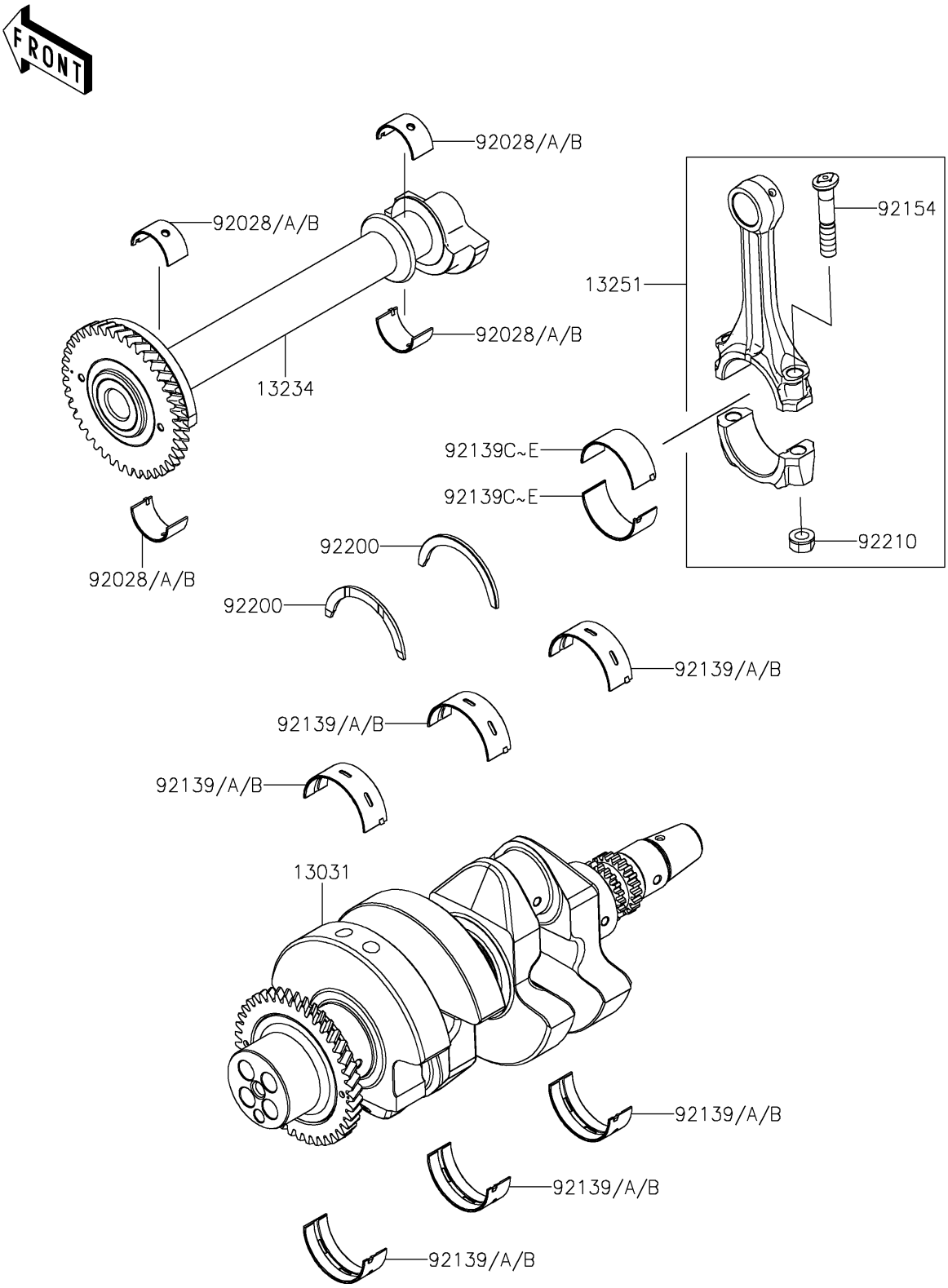

© 2026 Kawasaki Motors Corp., U.S.A.

2026 Teryx KRX4 1000 PARTS LIST

Crankshaft

ITEM NAME	PART NUMBER	QUANTITY
CRANKSHAFT-COMP (Ref # 13031)	13031-1554	1
SHAFT-COMP,BALANCER (Ref # 13234)	13234-0633	1
ROD-ASSY-CONNECTING,J (Ref # 13251)	13251-0749-JJ	2
BUSHING,BALANCER SHAFT,BLUE (Ref # 92028)	92028-1909	4
BUSHING,BALANCER SHAFT,BLACK (Ref # 92028A)	92028-1910	AR
BUSHING,BALANCER SHAFT,BROWN (Ref # 92028B)	92028-1911	AR
BUSHING,CRANKSHAFT,BLUE (Ref # 92139)	92139-0925	6
BUSHING,CRANKSHAFT,BLACK (Ref # 92139A)	92139-0926	AR
BUSHING,CRANKSHAFT,BROWN (Ref # 92139B)	92139-0927	AR
BUSHING,CONNECTING ROD,YELLOW (Ref # 92139C)	92139-0968	4
BUSHING,CONNECTING ROD,GREEN (Ref # 92139D)	92139-0969	AR
BUSHING,CONNECTING ROD,PURPLE (Ref # 92139E)	92139-0970	AR
BOLT,CONNECTING ROD (Ref # 92154)	92154-3911	4
WASHER,THRUST,T=2.5 (Ref # 92200)	92200-2242	2
NUT,FLANGED,9MM (Ref # 92210)	92210-1673	4

© 2026 Kawasaki Motors Corp., U.S.A.