1995 Ninja® ZX™-7 PARTS DIAGRAM

Decals(Green/White)(ZX750-L3)

F2861D

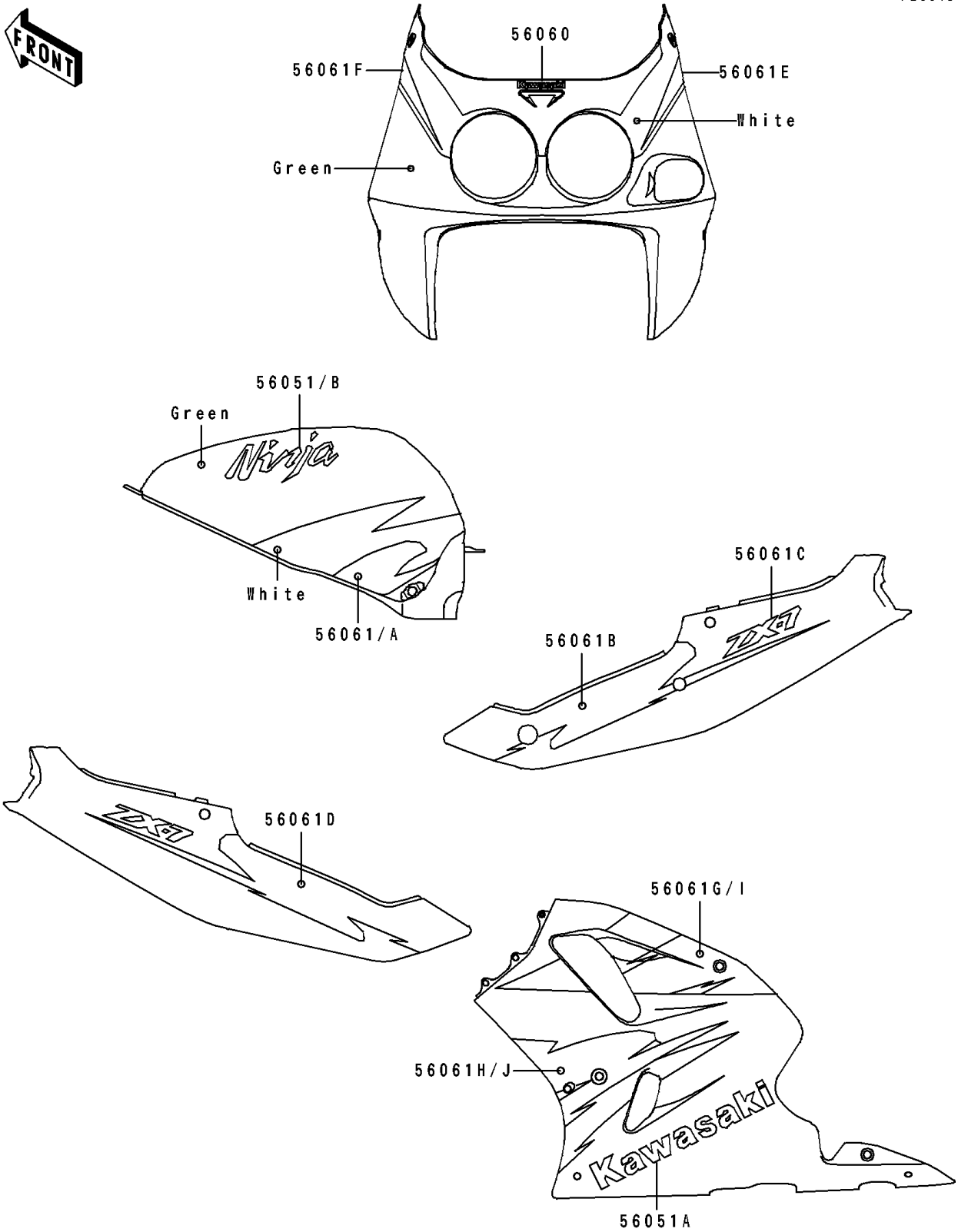

© 2025 Kawasaki Motors Corp., U.S.A.

1995 Ninja® ZX™-7 PARTS LIST

Decals(Green/White)(ZX750-L3)

ITEM NAME	PART NUMBER	QUANTITY
MARK,FUEL TANK,LH,NINJA (Ref # 56051)	56051-1190	1
MARK,KAWASAKI (Ref # 56051A)	56051-1191	2
MARK,FUEL TANK,RH,NINJA (Ref # 56051B)	56051-1207	1
PATTERN,UPP COWLING,CNT (Ref # 56060)	56060-1485	1
PATTERN,FUEL TANK,LH (Ref # 56061)	56061-1116	1
PATTERN,FUEL TANK,RH (Ref # 56061A)	56061-1117	1
PATTERN,SIDE COVER,LH,FR (Ref # 56061B)	56061-1118	1
PATTERN,SIDE COVER,LH,RR (Ref # 56061C)	56061-1119	1
PATTERN,SIDE COVER,RH (Ref # 56061D)	56061-1120	1
PATTERN,UPP COWLING,LH (Ref # 56061E)	56061-1121	1
PATTERN,UPP COWLING,RH (Ref # 56061F)	56061-1122	1
PATTERN,LWR COWLING,LH,UPP (Ref # 56061G)	56061-1123	1
PATTERN,LWR COWLING,LH,LWR (Ref # 56061H)	56061-1124	1
PATTERN,LWR COWLING,RH,UPP (Ref # 56061I)	56061-1125	1
PATTERN,LWR COWLING,RH,LWR (Ref # 56061J)	56061-1126	1

© 2025 Kawasaki Motors Corp., U.S.A.